INTERNATIONAL SNOWMOBILE RACING

1527 North Railroad Street Eagle River,WI 54521 262-335-2401

SNO CROSS 2026-27

Sno Cross 2026-2027

VERIFICATION AND CONTROL

These GENERAL RULES apply to all types of ISR racing sanctions and all classes unless so noted. All participants, racers and crewmembers are required to be fully aware of these regulations and must abide by them.

The rules for competition are intended only as a guide for the conduct of the sport in a uniform manner from region to region.

Safety rules and guidelines contained herein are of utmost importance. All participants must be concerned with safety and be familiar with these rules and guidelines. However, ISR does not warrant, guarantee, or ensure safety even if the rules are enforced and/or adhered to. Moreover, each participant in competition has the responsibility to assess the safety aspects of the facilities and conditions and must assume the risk of competition.

MANDATORY EMERGENCY VEHICLE

1. **A properly licensed and equipped emergency vehicle (i.e., rescue vehicle or ambulance) must be at the race site to transport injured persons to an appropriate hospital. This vehicle shall have all emergency equipment. Contract arrangements must be made to have a transport situation ambulance on site if a transport is made. Many tracks are now using a track owned ambulance for on-site work. Many times, these vehicles are not certified for transport of patients on the highway. Arrangements must be made for a certified transport ambulance to make the actual patient transport. Racing must not be allowed without an ambulance on the grounds.**

2. **If an event is located at a ski hill facility and it has qualified ski patrol personnel (Paramedics - ALS) and an onsite room fully equipped as an ambulance would be it can be substituted for the actual vehicle. When The terrain and driving distance by ambulance makes it advantages to use a prearranged air ambulance this method can be used to transport injured persons to an appropriate hospital after stabilization by Ski Patrol personnel. (Paramedics - ALS) CLARIFICATION: This applies to events with extended travel distances for transport, or possible difficult travel by ambulance. The facility must be manned during racing hours, with ALS -Paramedic grade personnel. Trained staff and appropriate transport equipment must be at the ready to transport victims from the racecourse, hill, mountain, or natural ice racetrack.**

RULE SUPPLEMENTS

1. **Rule supplements, additions or corrections shall be announced on the official website. Upon such an announcement the rule changes become effective and enforceable.**
2. **Telephonic race rules conference calls will be followed up with an information letter to the affected affiliates.**
3. **After a rules meeting, any request to reconsider a new rule requires a majority vote of the rules committee to approve a revote. Then, a ¾ majority is also required to change the rule.**

CLASS DIVISIONS

1. **All class entries will not discriminate based on sex. Any qualified member may participate in the approved classes offered in any sanctioned event.**
2. **A snowmobile will be allowed to race in its respective displacement, or designated performance class, and any larger displacement or performance class, except as noted in specific sections.**

JUNIOR CLASS RACING

NOTICE

Parents or guardians who knowingly enter a Transition class, Junior Class, Junior I, Junior II, Junior I Sprint, Junior II Sprint, F-500 Junior I, F-500 Junior II driver who is not of the legal age to compete in the specific class, will be subject to a $500.00 fine and one year suspension.
The driver also may be given a one-year suspension.

Affiliates who through negligence or not having an approved advancement system allow drivers under the age of 18 years of age to enter adult classes with out being certified through the advancement process may be fined $500 and possible loss of affiliation rights.

Advancement Procedure.

1. **No minors may enter adult classes until the age of 18, or if approved by the Advancement Procedure which is available starting at 14 years of age. You must be 16 years of to compete in a Pro class.**
2. **Each involved affiliate of the same discipline (example Oval Sprint) must either provide a qualification process, or declare to ISR they will observe other affiliates of the same discipline's advanced rider list. Affiliates with a qualified advancement program have the right to determine advancement of candidates as they see fit. Qualifying with one affiliate does not qualify the youth driver for all affiliates.**
3. **Affiliates may honor another affiliates advancement. Driver must present copies of the advancement prior to registration.**

AFFILIATE RESPONSIBILITIES

1. **Before an affiliated sanctioning body may advance Junior drivers, it must have a bona fide junior program. The affiliate's Junior Competition committee /Representative is responsible for verifying a Junior's driving ability.**
2. **Junior competitors shall be required to perform practice laps/runs from time to time to allow race officials to observe their progress in learning the handling skills required to advance.**
3. **Junior advancement is at the discretion of the driver's classification committee and can be reviewed at any time. The committee has the authority to advance, demote or deny advancement to any driver. The decisions of the classification committee are final.**
4. **The affiliate board/driver classification committee will not advance drivers until all DRIVER/PARENTAL RESPONSIBILITIES have been fulfilled and all completed and signed documents are on file.**

DRIVER / PARENTAL RESPONSIBILITIES

WHEN AN ISR COMPETITOR REACHES THE AGE OF 14 YEARS AND QUALIFIES FOR JUNIOR COMPETITION, HE/SHE MAY BE ADVANCED UP TO THE NEXT LEVEL, BUT ONLY AFTER FULLFILLING ALL REQUIREMENTS BELOW:
(SEE ADVANCEMENT FLOW CHART FOR SPECIFIC CLASSES IN JUNIOR COMPETITION SECTION).

1. **A Junior competitor must compete in at least one entire event in a given class before becoming eligible for advancement.**
2. **Before a Junior may advance to a senior class, he/she must meet the Junior advancement requirements established by the affiliate's board/driver advancement committee.**
3. **He/she must petition the affiliate's board, in writing, requesting that he/she be allowed to advance.**
4. **The request for advancement must be accompanied by all new consent and release forms (as specified above).**
5. **The request must be approved in writing by the affiliate board to advance.**
6. **Before advancing to a Pro Division class, the Junior must be at least 16 years of age.**
7. **Parents may request for their child to stay in a lower class if they feel the driver needs more experience to develop track and driving skills. For Advancement application Click here.**

REGISTRATION AND ENTRY

1. WAIVER FORMS ARE MANDATORY FOR ALL PERSONNEL IN SECURED AREAS (paddock, staging and track).
2. Driver must have registered at race headquarters and signed a waiver before any runs are made (practice or racing). No one, except officially entered drivers may ride or practice on any racecourse on the day of the event.
3. No refunds of entry or other fees will be made at sanctioned events after registration is closed, unless the event is cancelled or rescheduled by a ruling of the Race Director, after which time fees will be returned or advanced to the next event in the series.
4. Any competitor who pays for race entry or organization membership with a check or credit card is responsible for the payment of all charges should the bank or other institution fail to remit for whatever reason.
5. Drivers who fail to complete payment for entry fees are subject to discipline prescribed by the ISR affiliate. Drivers may be suspended for a period of one year from the date on which the debt is paid.
   a. If the participant stops payment on check or credit card, participant gives up the right to protest or appeal until full payment is made.
   b. Participants who pass NSF checks must pay entry and prescribed fees in full before the next race or within 30 days, whichever is sooner.
6. Insurance fees are not refundable.
7. Regional service charges or insurance surcharges are not considered part of entry fee maximums.
8. Gate admission fees for driver and crewmembers will be regulated on a regional basis.
9. The order of events will be regulated on a regional basis.
10. The maximum number of classes a driver can enter per day will be regulated on a regional basis.
11. Any class or event can be eliminated when there are less than two (3) official entries at the close of registration.
12. All participants in events must be fully familiar with the rules and regulations, plus such rules by Race Promoters that may be specifically applied to any event.

Sno Cross 2026-2027

DRIVER AND SNOWMOBILE

1. A driver and his snowmobile (chassis and engine) shall be considered a unit and once the class has begun, neither will be substituted. If a driver qualified on a snowmobile, both must be in the same final event of the class and/or event.
2. Engine parts may be replaced during the event, except for the crankcase and crankshaft, which may not be replaced.

SPONSOR IDENTIFICATION

1. Anytime the sanctioning organization or sanctioned event has a sponsorship, all members and promoters must meet sponsorship requirements, if drivers' number system is not compromised.
2. Recommended size for any sponsor's required emblem should not exceed sixteen (16) square inches on the front and twenty-four (24) square inches on the back of the driver's uniform.

DRIVER IDENTIFICATION

1. There will be an automatic suspension for drivers who race under another driver's number.
2. All drivers will wear their issued bib or a facsimile thereof. Drivers will be required to keep the snowmobile numbers and drivers' body back numbers in a legible condition. Drivers must either wear a bib with their name and number for the event or their number built into the upper body outer garment worn during competition. Numbers are to be 8 inches high with a one- inch width. Name letters are to be 2 inches high with a 3/8" width.

SNOWMOBILE IDENTIFICATION

1. The driver's assigned competitive number must be displayed on both sides of snowmobile hood. The number must be a minimum of six (6) inches high, 3/4 inches wide and be displayed in contrasting colors. (Windshield and tunnel are optional.) NOTE: If the scorers cant read your number you will be scored last.
2. These numbers must be displayed on the snowmobile in a permanent manner before being allowed to race (see illustration).

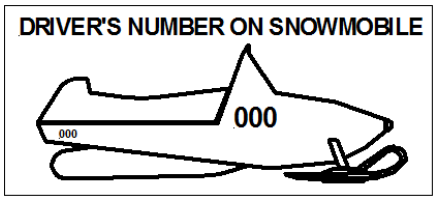

PRE-RACE SAFETY INSPECTION

1. ANY ENTRY IS SUBJECT TO INSPECTION AT ANY TIME UPON REQUEST BY THE RACE DIRECTOR OR TECHNICAL DIRECTOR.
2. Pre-race safety inspections are mandatory at all races. Passing a pre-race safety inspection is no guarantee that a snowmobile complies with all rules for the event. Affiliates may allow prerace safety inspections to be conducted at the first race of a series and allow the sled to compete in subsequent events in the series without reinspection if on track records indicate no evidence of crashes during competition.
3. Only snowmobiles having passed pre-race inspection will be allowed on the racetrack.
4. All aspects of modification are contingent on safety inspection by the Technical Director. The Technical Director may remove any snowmobile from competition that does not meet safety requirements.
5. Damaged or broken safety equipment (not including tether switch) not detected during a race is not grounds for disqualification after completion of that race unless black-flagged during the race in question.

MANDATORY TEARDOWN

1. Regardless of snowmobile equipment passing prior inspections, compliance with the rules must be made at the post-race inspection.
2. Once a snowmobile has completed registration to race it may be inspected at any time.
3. Tech Director will select the snowmobiles for mandatory teardown and inspection. Drivers will take their snowmobiles directly to Tech after completing the race. The snowmobile must remain in Tech until released by the Tech Director or a designated member of the Tech staff.
4. Driver and/or driver's mechanic will perform teardown to point required by the Technical Director.
5. Any driver not reporting to Tech or refusing teardown will be disqualified.
6. Inspected snowmobiles will not be reassembled by the inspection group.
7. Driver and/or driver's mechanics will be the only two (2) people allowed with the snowmobile in the inspection area.
8. The sanctioning organization assumes no responsibility for impounded snowmobiles.

SEALS

1. Drivers will allow the installation of a seal or seals on the engine and/or body of their racing snowmobiles. To change the seal, mutilate it or try to break it, or re-use it, during the weekend or event where it is installed without the consent of the Race Director, could result in the responsible driver being called before the disciplinary committee for strict discipline. Accidental breakage of the seal must be reported to the Race Director immediately. Drivers/sled owners will provide and preform the required drilling of fasteners, or engine block tabs for the Tech inspector to seal the unit with a uniform wire/lead seal or other device. Sleds within a series may be sealed by other methods, acrylic torque paint, specialty seals, or digital photos of specific items. Affiliates do not have to honor other affiliates seals.

Sno Cross 2026-2027

PROTESTS

1. All formal protests must be made in writing, by a driver, in competition at the event, from the class in question, on a formal protest form, accompanied by a cash protest fee (protest fee may vary by region or circuit) two hundred and fifty dollars **($250.00)** recommended**.**
2. When the official protest is made with the fee, the item to be protested must be stated (a general protest will not be accepted), teardown will not be complete until protest is found to be valid or proven unwarranted. If the protest is valid, the fee will be returned to the protester. If the protest is invalid, the fee will be given to the protested snowmobile owner for the inconvenience (to be accomplished before the snowmobiles are released from teardown).
3. There is no need for formal protests in the case of driving infractions during an event. Reports of such alleged infractions should be made to the Race Director, who in turn will request a report from the flagman or assigned official on the course.
4. **Race Director has the authority to determine the validity of a protest.**
5. **No protests/appeals will be accepted that refer to a Race/Technical Director's judgement or decision**.
6. **It shall not be possible to protest or appeal technical inspection equipment, manual /electronic scoring, or manual/electronic timing equipment.**
7. Protests must be filed within thirty (30) minutes following the completion of the daily event or within thirty minutes following the official announcement of results for the class in question whichever occurs first**.** Race directors have the authority to increase the time to file a protest for a competitor but may not shorten the time allowed.
8. Properly filed protests must be addressed by sanctioning body before finalizing class results. ISR must be informed of the protest in writing immediately after the protest is filed. Electronic method of communication preferred**.**

APPEALS PROCESS

The following appeals process shall be applicable for all ISR affiliates and will be the binding operational guide and procedure statement for all affiliates. For any Affiliate that has an internal Appeals Process, the process will only apply to operations inside the association or company and will not have any bearing on race rule interpretation, infractions, misconduct, or other situations that may arise from race activity.

TECHNICAL INFRACTIONS

Driver or team are found in non-compliance with the rules concerning fuel, sled construction, specific dimensions, materials used, or components used not conforming to the rules for each specific class, the following will be the procedure.

Tech Director or Race Director determines infraction and makes the appropriate decision considering the gravity of the offence. The Director may:

a. Verbally warn driver or team.
b. Disqualify driver from event for the class specified.
c. Disqualify driver from all events entered in days competition.
d. Fine driver, if affiliate has a fine process in place in the affiliates bylaws or published operational guide, and the fine system is published in their membership documents.
e. Suspend driver or team for season.

ON TRACK INFRACTIONS

Race Director determines infraction and makes the appropriate decision considering the gravity of the offence. The Director may:

a. Verbally warn driver or team.
b. Disqualify driver from event for the class specified.
c. Disqualify driver from all events entered in days competition.
d. Fine driver, if affiliate has a fine process in place in the affiliates bylaws or published operational guide, and the fine system is published in their membership documents.
e. Suspend driver or team for season.

If the affected driver feels the decision is not correct, he/she may appeal the decision in the following manner.

1. **The Appeal must be presented to the affiliate Race Director in writing using the ISR approved form available from the ISR web site. This form must be presented within 30 minutes of the announcement of the disqualification or penalty. Race directors have the authority to increase the time to file a protest for a competitor but may not shorten the time allowed. The Appeal must be accepted by the affiliate.**

2. The affiliate must within 24 hours convene a meeting of the owner/ management/ officials of the affiliate and review the offense/ infraction. If the offense is upheld, the driver/team can request a further appeal to ISR and ask for a review by the rules group for the discipline. ISR has 5 days to conduct such review with the rules committee of the specific discipline.
If the Appeal is found valid, all points, money, prizes, etc. are returned/ awarded to the driver/team.

Sno Cross 2026 - 2027

3. If the offense is upheld, the Affiliate and the Driver/team must inform ISR of the situation within 24 hours of the alleged infraction. ISR will then, within 5 working days conduct a review of the situation, convene the appropriate rule review group from the proper discipline/aspect and render a decision. The decision of this session is binding and has no further appeal.

Affiliates and Drivers must review the Chain of Custody and submission of components/ fuels/ design concepts presented for the Appeal. If the driver/team does not submit samples, exhibits, photos, etc. of the offending component or fuel, the appeal is considered void, and the penalty stands. If the Affiliate does not accept and submit samples, exhibits, photos, etc. of the offending component or fuel, the appeal is considered void, and the penalty is rescinded, and all prize money, awards and points are returned to the driver/team. There is no appeal of any type to this operational chain of evidence and procedure. The Operational Guideline and Appeals Forms are found here:

Download Appeal Forms Here

Race Operation Infractions Click here Technical/ Equipment Infraction Click here On Track infraction Click hereNOTICE

Driver infractions/ disqualifications in drag racing, oval racing, Enduro racing, cross country racing, water cross racing, and speed run racing events will be forwarded to all ISR affiliates.

NOTICE

Drivers, promoters, or any personnel affiliated with ISR snowmobile events who are banned from racing or subject to other major penalties by one affiliate, having completed the hearing process, the decision shall be honored by all ISR affiliates in that discipline.

PRIZES AND AWARDS

1. All prizes, awards and paybacks shall be presented to the official winners or their appointed representatives at the close of the event, unless specifically advertised otherwise as to the time and place of awards.
2. Drivers will not be required to attend award banquets, parties, ceremonies, etc., to receive prizes, awards, or pay-backs, although they are encouraged to cooperate as a courtesy to the promoter.

PIT AND PADDOCK/STAGING AREA

1. Reasonable speeds will be observed in the pit and paddock area. All pit areas are caution zones where utmost in driver awareness is required.
2. Hot pit and staging areas are limited to drivers preparing to race and their pit crewmembers. Minimum age for pit crewmembers in these areas is 14 years old. All persons in these areas must have signed a release and waiver for the event.
3. There is no minimum age for people in paddock, pit parking and cold pit areas. It is recommended that people in these areas be required to sign a release and waiver.

TESTING, TUNE-UP, WARM-UP & PRACTICE

1. Officials must provide proper supervision of the testing areas as well as adequate crowd control to prevent spectators or other persons from moving onto the area.

SUPPORT VEHICLES

1. No unauthorized motorized vehicles will be allowed in the pit or staging area. Snowmobiles must return under their own power. Only disabled snowmobiles may be towed from the track.

DRIVER PROTECTIVE EQUIPMENT

It is the responsibility of the racer to select protective equipment that will conform to ISR guidelines and provide adequate protection. Even though race rules committees and ISR develop guidelines, ISR does not endorse or guarantee specific products or manufacturers of protective equipment. Racers must rely on their own judgment in the selection of helmets and other apparel for protection and durability.

1. Regardless of driver apparel passing prior inspections, compliance with the rules must be made at post-race inspections.
2. No cameras or digital acquisition devises can be attached to any driver's helmet. This will be in effect anytime a race vehicle is on the track, whether it be a test, practice session, or in competition.
3. ISR strongly encourages all drivers in all disciplines / divisions to source helmets that continue to display High Vis Colors/International Orange that cover 75% for Oval Racing (Late Model and Vintage) and 50% for Snow Cross to prevent driver injuries during competitive events.
4. **All helmets must provide full protective coverage and meet the Snell Foundation's 2025 certification standards. Helmets certified under the European ECE 22.06 standard are also approved**. These are also mandatory in the tune-up area. The helmet must be securely fastened at all times. Helmet must display original ECE, or Snell decal as provided by the manufacturer. Decals that are covered or eliminated will be cause for rejection of the helmet. Enclosed cockpit sled drivers must use a current automotive certified helmet meeting Snell SA specification. Competing with a helmet that is not the same as presented at safety inspection will result in disqualification.

Sno Cross 2026-2027

1. At least one hundred forty-four (144) square inches of visible area on both the driver's front and back (upper body) will be blaze orange in color at all events. Jackets / Pullovers / Jerseys will be teched lying flat on the ground front and back. Gloves and clothing, along with at least above ankle leather boots are mandatory (above ankle boot must have a minimum of 6 inches of leather above the ankle).
2. Eye protection mandatory; facemasks may be required at the starting line at the discretion of the Race Director. If corrective lenses are required to drive a motor vehicle, the driver will also be required to wear them when racing.
3. Hearing protection is mandatory in all non-stock classes in all types of competition. Recommended for all stock class competition.
   The use of upper body protection equipment is mandatory, except for enclosed cockpits. The upper body protection must cover all body areas shown in illustration. It will protect the driver in mid-body and back areas and be capable of resisting penetration and dissipating force of impacts while absorbing the shock of most blows. Typical motocross vests do not meet this rule. **Competing with upper body protection that is not the same as presented at safety inspection will result in disqualification.**

Must have these 4 things

Chest Protection
Back Protection
Shoulder pads
Kidney protection

Optional
Arm Pads

ISR requirements

The upper body protection must cover all body areas shown in illustration. It will protect the driver in mid-body and back areas and be capable of resisting penetration and dissipating force of impacts while absorbing the shock of most blows. Typical motocross vests do not meet this rule.

4. Shin and knee guards are mandatory. Shin and knee guards will be worn on both legs. The shin guard must extend from the instep to above the kneecap and be constructed of an impenetrable material. **Competing with shin and knee guards that are not the same as presented at safety inspection will result in disqualification.**
5. Upper Arm Pads and Elbow pads are highly recommended in all forms of racing.
6. Neck bracing is driver preference and is not required.
7. Drivers, crew members, team owners, staff, and support people may not be physically on the race surface at any time once an event has started. This includes walking the track to inspect for changing track conditions and other concerns. Anyone doing so will be penalized at the race director's discretion. Penalties may range from a verbal warning to ejection from the facility.

GENERAL COMPETITION

FLAG RULES

1. There shall be a meeting between the flagman or his representative and corner flagmen prior to the start of a race so there is a definite understanding concerning the use of the corner flags.
2. Any competitor who does not obey the following rules will be subject to disqualification and/or fine.

GREEN FLAG

1. Start of race or signifies course is clear and race is in progress.

YELLOW FLAG

1. Displayed in track corners or along straightaway signifies there is an additional safety hazard on the track.

RED FLAG

1. The red flag means the race will stop immediately regardless of position of snowmobiles on the track. The red flag will be used if, in the opinion of the Race Director or Chief Starter, the track is unsafe to continue the race. Snowmobiles should be brought to the starting line or pre-designated holding area if possible, using extreme caution. Snowmobiles must not leave the track proper unless directed to do so by the Race Director.

BLACK FLAG

1. On closed course races, should a vital snowmobile component such as clutch guards, ski or ski loop become dislodged or discarded, the starter upon his own recognition or being informed by track officials will display the black flag to the involved driver immediately infraction.
2. A rolled black flag is a warning to a driver that he/she may have an equipment failure or that he/she may have committed a driving infraction. Consultation flag-leave course immediately and report to the Race Director, this does not necessarily mean disqualification; however, failure to obey the rolled black flag could result in disqualification, suspension or fine. On closed course races, should a vital snowmobile component such as clutch guards, mud flaps, ski loops or ski become dislodged or discarded, the starter must display the black flag to the involved driver immediately.

WHITE FLAG

1. When displayed, drivers have started their last lap.

CHECKERED FLAG

1. When the checkered flag is displayed, it means the race is complete.

BLUE FLAG WITH YELLOW DIAGONAL

1. For passing/ this flag will be displayed to snowmobiles being lapped.

SIGNAL LIGHT RULES

1. Sanctioning bodies, which employ signal lights, must inform competitors of their signal light protocol before the start of the event. When light signals are used instead of flags, all competitors must be made aware of signal light procedures prior to the race.
2. Competitors must obey signal lights.
3. The following signals apply to OVAL closed course races:
   a. GREEN LIGHT-Start of race.
   b. YELLOW LIGHT-Caution
   c. RED LIGHT- Stop snowmobile. At the direction of the Race Director, return cautiously to the starting line or designated holding area.

TIMING

1. It is the driver's responsibility to see that his snowmobile triggers the scoring system properly.

RACE STARTING PROCEDURES

1. All drivers must be assembled on the starting line, ready to race within two (2) minutes of notification of their race (except special events). This is defined as when the sleds were summoned to leave the pits. The two-minute clock starts when the first sled of the group leaves the pit and enters the racecourse. All the other sleds in the event/heat/final are required to be on the line within the two- minute window.
2. All participants (including crewmembers entering the start line area, are required to wear eye protection or safety glasses.
3. Snowmobiles must be placed on an approved stand for warm-up and/ or for clearing the track. See CLEANOUT/SAFETY STANDS in this chapter.
4. All snowmobiles on the starting line must have the track and both skis flat on the course surface before starter begins the race.
5. All snowmobiles will be started from a standing position, in a line abreast (unless stated otherwise).
6. The driver's feet must be on the running boards or stirrups. The Race Director may disqualify a driver if the driver's method of start interferes with other contestants.

Sno Cross 2026-2027

START

1. On a false start a racer will be penalized by the Chief Starter, Race Director or Flagman, and a penalty if designated will apply.
2. There shall be no change of drivers at any time.
3. Events that take place under natural lighting will be terminated thirty (30) minutes after published sunset. This rule must be strictly enforced. Furthermore, this rule assumes that there are no other visibility issues other than sunset. If visibility is reduced beyond the prescribed limit by other factors, racing must be halted before the prescribed time.
4. Any conditions that reduce visibility (prior to 30 minutes after sunset) must be considered before continuing to race. Other conditions include (but not limited to) snow dust, ice dust, fog, haze, clouds, mist, falling snow, falling rain, and smoke.
5. It is the Race Director's responsibility to discontinue racing if the visibility falls below the prescribed level at any time during the day.
6. An injured or otherwise incapacitated driver or damaged snowmobile shall be prohibited from racing with exception that if in the Race Director's judgement, the driver or snowmobile is determined not to be a danger to driver's self or any other competitor. The Race Director's decision is final.

RACE RESTART PROCEDURE

1. The Race Director may have a restart at his discretion. Race Director's decision is final.
2. In the event of an accident involving one (1) or more snowmobiles, the Tech Director may at his sole discretion rule said snowmobile(s) mechanically unsafe to participate in the restart. These snowmobile(s) must be fully safety inspected and approved by the Race/Tech Director before further competition will be permitted. All snowmobiles will be stopped under the red flag. The flagman will notify drivers when to move snowmobiles and he will have them proceed slowly to the point of restart. If only one (1) lap, or less, has been raced, the order of snowmobiles for the restart will be the same as the beginning of the race (with the following exceptions):
3. Any snowmobile causing the stop of a race and a subsequent restart will be placed to the rear of the restart sequence.
4. Any snowmobile unable to immediately return to the starting line will be placed to the rear of the restart sequence.
5. After more than one (1) lap has been raced, the restart position of the snowmobiles reverts to the last officially counted.
6. With the Race Director's permission, only one (1) crewmember (per snowmobile) will be allowed on the track in the event the competitor cannot start his/her snowmobile alone. No mechanical work can be performed by the crew member. He may assist the driver in starting the sled, by pulling the recoil device/rope, controlling throttle, applying choke/enrichener, or alternate fuel delivery squirt bottle, removing the hood, securing hood, and tether switch, handing safety and personal equipment to driver.
7. Drivers and snowmobiles must be on the starting line within two (2) minutes of restart notification.
8. Upon be summoned to restart, all crew members shall leave the track surface except the designated crew member who assists in the engine starting procedure with the driver.

LEAVING THE COURSE

1. Drivers should stay on the confines of the marked course. At the discretion of the Race Director, a driver may be disqualified for leaving the confines of the course. (Check with your ISR afflates policy)

2. Drivers may not stop on the racecourse. If mechanical problems or other factors require stopping, driver will comply with rules for the specific event as prescribed by the officials before the event.

CONTROL OF SNOWMOBILE DURING RACE

1. It is expressly forbidden to drive or push a snowmobile in a direction other than that of normal race traffic. A driver who has spun out is permitted to turn snowmobile around to continue the event provided such action is taken only when the course is clear.

BLOCKING AND FOOLISH DRIVING

1. The deliberate blocking of a faster snowmobile is cause for disqualification at the discretion of the Race Director.
2. Bumping or cutting of lanes is cause for penalty or disqualification at the discretion of the Race Director. Any dangerous or foolish driving, bumping, chopping, or unsportsmanlike conduct on the course, in the pit area, or anywhere else on the race grounds will subject contestant to disqualification at the discretion of the Race Director.

OBSTRUCTION

1. If for any reason a driver is forced to stop on or near the course during an event, it would be the driver's first duty to remove the snowmobile from the track so as not to endanger or obstruct other drivers.
2.

RACE FINISH

1. The finish line will be clearly marked.
2. A driver whose snowmobile is disabled before driver reaches the finish line may be pushed or pulled by driver's own unaided muscular energy

Sno Cross 2026-2027

across the finish line and will be considered to have completed the race. A competitor is said to have finished the race when driver is in contact with the snowmobile and any part of the snowmobile crosses the finish line.

3. All laps must be completed by first (1st) place snowmobile to declare a finish. All competitors will be given a finish position per number of laps completed. Any drivers that do not complete the checkered flag lap will be scored in order of finish and laps completed. Appropriate points and prize money will be awarded based upon published formulas.

SIGNALS

1. A driver who has spun off or stalled must raise both hands over driver's head to indicate that no more movement will be made until the field has passed and to indicate no injury.

DRIVERS BRIEFING

1. The mandatory meeting (or meetings) will be held at an announced time and place. It will be conducted by the Race Director and Race Promoter. Descriptions of the course, flags, etc. will be made. An interpreter should be used when needed. Pins, stamps, tags, roll call, random call, etc. may be used to check the identity of drivers at the briefing.

RADIOS

1. There will be no independent radio transmission on sanctioning body's radio frequency.
2. Unless otherwise stated, radio communication between crew and driver is not allowed while the driver is on the course.

CLEAN OUT / SAFETY STANDS

1. Snowmobile safety stands that catch and retain track, track lugs, traction components and other items that are thrown by a track are mandatory (see illustration).

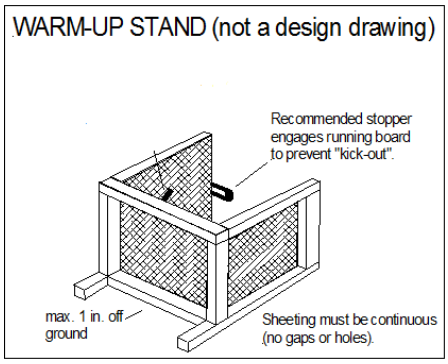

2. The stand must be no more than six (6) inches from the rear of the tunnel opening and no more than twelve (12) inches from the track. The safety stand will be constructed of metal equivalent to 6061/T6 aluminum, 1/8 inch thick. Side panels are mandatory, and they must extend at least to the center of the rear axle. Vertical coverage must be no more than one (1) inch off the ground/ice and as high as the snowmobile support device. Coverage must be continuous (no lightening holes). A plywood liner is recommended to help absorb impact. Safety stand must maintain enough height to prevent track encountering ground/ice surface. The stand must be used whenever the rear of a snowmobile is raised to clean out the engine or track.
3. No full throttle operation while snowmobile is on warm up stand.

MISUSE OF PIT PASSES

1. Improper usage of pit or paddock passes will be grounds for discipline.

FIRE EXTINGUISHER

1. Fire extinguishers must be available in pit, paddock/staging and starting line areas. Fire extinguisher minimum size will be five (5) pounds with ABC fire extinguishing capabilities. Fire extinguishers will be in place before the start of the race. All enclosed trailers/haulers must always carry a minimum of 2 – 5-pound ABC rated fire extinguishers. These extinguishers must always be accessible and functional.

Sno Cross 2026-2027

GENERAL SNOWMOBILE RULES

These GENERAL RULES apply to all snowmobiles in competition unless so noted. All participants, racers and crewmembers are required to be fully aware of these regulations and must abide by them.

Participants are solely responsible for the condition of their snowmobiles and their competence to operate them.

Where the rules permit or require components or equipment to be installed, replaced, altered, modified, or fabricated, it is the sole responsibility of the driver to select components, materials and/or fabricate the same so that the components will perform safely in competition.

CLASS ELIGIBILITY & SNOWMOBILE ID

1. Unless otherwise specified in specific ISR rules, a snowmobile used in more than one class or division must comply with all rules and safety guidelines for each class or division in which it competes.
2. In stock and stock-based classes, the chassis and engine must have been originally OEM assembled and serial numbered indicating that the snowmobile is a stock qualified unit from the production run of a stock qualified model.
3. All snowmobiles in Modified classes must have serial numbers permanently affixed to the engine and the frame. Duplication of serial numbers is not allowed.
4. If the tunnel, engine, or other serial numbered part is replaced, the serial number must be removed from the replaced part and affixed to the new part.

ENGINE

1. ISR and/or the Race Rules Committees will approve the validity of all engine intake systems.
2. In stock and stock-based classes, the engine must have originated from a stock qualified, OEM produced snowmobile.
3. In stock and stock-based classes, coolant thermostats, regardless of location in the cooling system, may be ran as produced, changed to alternate temperature settings, or completely removed. If removed a control plate/washer to control volume of flow may be installed in its place. This plate shall serve no other function than restricting the flow of coolant.
4. In Stock classes, the OEM for the model exhaust system must remain as produced by the manufacturer and must be fully functional. In Mod classes it will be specifically noted as to which exhaust components may be changed or modified.
5. In two cycle engine classes with individual chamber exhaust for each cylinder, the following minimum standards for straight-thru silencers are required:

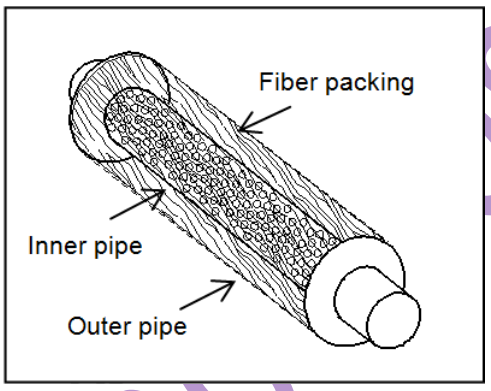

a. Inner pipe must have at least 15 holes per square inch. Minimum hole size 1/16 in. (Minimum 3/8 in. sound absorbing material around the entire circumference of inner pipe).
b. Inner pipe (perforated core) must contact sound absorbing material (fiber or steel wool packing).
c. Outer pipe must be at least ¾ in. larger than inner pipe.
d. Minimum silencer length 3 in.

6. OEM carburetor slide valves and replacement jet components without modification will be allowed in all Stock classes. No modification to carburetor body will be allowed.
7. An adequate return spring on the throttle is required.
   The throttle must be a direct mechanical thumb mechanism, which must be located on the rear side (toward the rear of the snowmobile) of the right-hand handlebar. Throttle must be thumb operated. Twist grip throttles not allowed.
8. All Stock classes - Choke control devices may be disconnected; however, they may not be removed from their mounting location.

DRIVE

1. Brakes shall always be operative. Brake lever must remain on the left, front side of handlebar.
2. The master cylinder, caliper and disk assembly must be commercially available.
3. In Modified classes, anytime the brake assembly has been modified or relocated, the brake disk must be covered with a shield capable of retaining an accidental explosion.
4. The disk pad contact surface area may not be reduced more than 15% of the original pad contact surface area.

SNO CROSS 2026-2027

5. Chains, pulleys, belts and exposed moving parts will be isolated from the driver and other competitors by shields capable of retaining all accidental explosions and component impacts. Integrity of protective shields shall be at the Race and/or Tech Director's discretion. No holes may be drilled in protective shields.
6. Unless otherwise specified, stock class belt guards are acceptable in Stock classes only.
7. Secondary clutch windage plates may be removed in all classes.
8. Custom clutch guards, clutch guards on purpose-built chassis, and specialty chassis may use Carbon fiber, Kevlar, and other materials as reinforcement of standard clutch guard material and design. Newly designed clutch guards must exceed the specifications and limits established in standard clutch guard requirements, See specific disciplines for details. Each specific clutch guard must be submitted to ISR with digital pictures (both installed and uninstalled, at least four views) and a detailed explanation of design, design limitations, and method and type of fasteners used to affix the guard to the chassis. ISR may request an appointment to inspect on site.

SKI SUSPENSION AND STEERING

1. All handlebar ends must be plugged.
2. Only steel suspension springs allowed unless otherwise specified.

SKIS & SKI RUNNERS

1. Except where otherwise specified, one cutting edge (steering edge) allowed per ski on snowmobiles with independent front suspension. Any ski edge with over 1/2-inch turndown constitutes a cutting edge.
2. A maximum of fourteen (14) inches total length of carbide per ski is allowed. (Unless otherwise specified in specific classes).
3. All ski loops must be at least one (1) inch wide and 5/8-inch-thick or 1-inch diameter round material. The arc of the leading edge of the ski loop must have an outside radius of at least 2 1/8 inches and extend at least 120 degrees upward (see illustration). Plastic ski loops must be affixed with steel bolts.

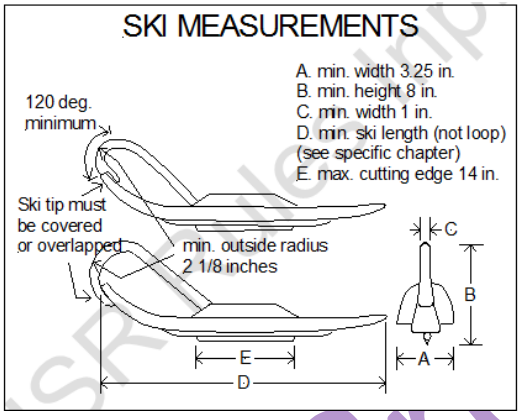

4. The ski loop must overlap the end of the ski and secure to the underside or it must cover the leading edge of the ski entirely. Exceptions may be noted in class specifics.
5. Metal ski loops must be affixed with steel bolts and not welded (Oval-minimum two fasteners).
6. Metal ski loops must have adequate lateral or vertical support bracing to prevent ski tip loops from dislodging or breaking off.
7. Ski tip (not including the loop) must be turned up 1.5 inch from the bottom of the ski (not including the keel(s) or ski runner).
8. No part of the ski may contact the body or suspension through the ski's normal range of travel and/or movement.
9. Ski loop failure of any type is grounds for disqualification.

TRACK SUSPENSION

1. Any OEM type slide rail hyfax may be used as a replacement.
2. Slide rail hyfax can be drilled in all classes.
3. Where allowed in these rules and by local environmental laws, slide rail lubrication systems may be used. No lubrication medium will be allowed that hampers competitor's visibility. No toxic solutions may be used.
4. Only steel suspension springs allowed unless otherwise specified.
5. At safety inspection, track suspension travel will be measured vertically at the rear bumper, two inches of travel must be noted with a max 150 pounds of weight displacement.

TRACK AND TRACTION

1. Track dimension rules are specified in each chapter. A 1/8-inch maximum variance in the minimum track width requirement is allowed. No cutting, notching, or trimming of the track is allowed, this is class and discipline specific, and is not allowed unless preceded by an ISR Competition bulletin.
2. Unless otherwise indicated, the track must be centered on the centerline of the tunnel in all modified classes. Modified classes are allowed track offset for installation of brake assembly on front driveshaft. In no case may this offset be more than 2 (two) inches, determined from edge of track to inner edge (side) of tunnel. In Stock and Stock-based classes, the track location must be as produced unless otherwise specified.
3. In all forms and classes of racing, track clips and guide clips may be replaced when worn - guide clips may be removed and replaced with track clips - track clips may be removed and replaced with guide clips - the track must retain the original number of clips with which it was produced.
4. In all forms of racing, there are traction device limitations, see specific chapters for details (see Appendix for traction device measurement

Sno Cross 2026-2027

details).
5. Identification numbers affixed or molded into tracks by the molder of the track must remain completely visible and unmodified. No traction devise or other item may be installed over the identification numbers on the track. Identification numbers include model number, serial number and/or any other information applied to the track by the molder.
6. Tracks may not be reversed.

FRAME AND BODY

1. A rear snow flap of sufficient material must be installed in a permanent manner and shall be held down (restrained from rearward movement) to restrain traction components, snow, mud, rocks, and other material thrown from the track at all speeds. Recommended materials are 3/16-inch fiber reinforced rubber belting or 3/16-inch semi-rigid plastic such as HD polyethylene or UHMW polyethylene.
2. The snow flap must overlap the widest part of the rear tunnel opening by at least one inch on each side.
3. The rearward movement of the snow flap must be restrained with steel cable (or similar material) to the frame of the snowmobile.
4. The snow flap must be in contact with the course surface when the rider is on the snowmobile. Violation of this rule results in mandatory expulsion from the class.
5. Unless otherwise stated, seats in Stock class must be OEM for the model. OEM seats have no requirements for fabric, padding, dimension, or coverage. If the seat meets manufacturers legal design criteria it is legal for any class, stock or modified.
6. Unless otherwise specified, tunnel protective strips may be added to underside of tunnel to protect the tunnel and cooling system from being damaged by traction products.
7. Snowmobiles used in competition may be painted any color with the following exception, in SNO Cross orange or international orange may not be used.

IGNITION & ELECTRICAL

1. All snowmobiles must be equipped with a tether switch that must always be attached to the operator and be operable . The switch must "kill" the engine by disconnecting the ignition system when the operator and the snowmobile become separated. It is the responsibility of the driver to make certain that the tether is attached to everyone who starts the engine or operates the snowmobile.
2. The tether cord will be securely fastened to the driver. D rings/tabs on gloves and jackets are not designed for the abuse encountered during competition and accidents. It is required have your tether cord mounting location on your jacket or upper body protection in a reinforced area. A race or tech director may disapprove of the attachment method at any time. Drivers will not be allowed to compete until the attachment situation is rectified.
3. Maximum tether cord length will be 4 feet except where noted otherwise. Verification of tether cord length will be determined at tether cord's fully extended length.
4. The tether cord will be securely fastened to the driver. No alligator clips allowed.
5. The tether switch will be securely mounted in a location on the snowmobile other than on the handlebars or steering column.
6. All snowmobiles must have a handlebar mounted button (on/off) kill switch on the right side within thumb reach (this is in addition to your tether switch).
7. No Wet Cell batteries allowed.

FUEL REGULATIONS

NOTICE: It is advisable for all competitors to have their fuel tested at the event, before competing.

1. A contestant appealing a fuel disqualification must bear the expense of the fuel analysis and handling.
2. Allowed gasoline and lubricants:
   a. Only a commercially available pump gasoline that complies with these rules is allowed. (The term "pump gasoline" includes fuels dispensed from service station pumps and racing fuels that are commercially available in fuel cans and drums.) The gasoline may be mixed with petroleum, vegetable, or synthetic based lubricants. The use of oils, fuels (including gasohol), and additives that provide power-boosting characteristics are strictly forbidden.
   b. Only motor fuel compounded of standard pump gasoline and an acceptable lubricant are allowed. Additives that produce power more than that produced by standard pump gasoline and petroleum base oil shall not be permitted. The list of unacceptable additives includes, but is not limited to, alcohol, nitrates, and other oxygen bearing compounds.
   c. No competitor or driver's pit personnel shall possess power boosting additives or agents upon the race premises of the sanctioned event. Violations of this rule shall subject the violator to severe disciplinary procedure.
   d. Aerosol cans of ether are allowed at sanctioned races for starting purposes. No driver will be allowed to carry such cans on their person or their snowmobiles during the race.
   e. Driver statements as to their fuel components will be binding and may be verified by various fuel tests. Drivers must allow officials to test their fuel at any time.
   f. Youth Oval Racing classes, commercially available gasoline that is reformulated with up to 10% ethanol is allowed, the exception being "Big Track" competition for 120, 206 and 200 base class sleds. 120/206/200 and all oval junior classes must use legal fuels containing no ethanol.

SnoCross 2026-2027

FUEL TESTS

WARNING: Gasoline, lubricants, additives, and fuel test reagents are all potentially hazardous materials. Anyone handling them should be aware of the hazards and act accordingly. Race Rules Committees and ISR establish these guidelines and recommended test procedures, but do not assume liability for injury or death caused by the handling of these materials.

Any or all these tests may be employed. Test results may be confirmed from time to time using an infrared spectrometer.

IF ANY OF THESE FIELD TEST ARE FAILED BY A PARTIAPANT HE WILL BE DQ'ED FROM ALL CLASSES THAT HE PARTICAPATED IN FOR THAT DAY.

1. ELECTRICAL CONDUCTIVITY (DI ELECTRIC CONTENT)
2. CERIC NITRATE REAGENT TESTING
3. REAGENT D TEST FOR DIOXANE
4. WATER SOLUBILITY TESTING
5. ANY OTHER TEST APPROVED BY RACE RULES COMMITTEES

ENFORCEMENT, DISCIPLINE AND VIOLATIONS

All participants are subject to disciplinary action for violations of these rules in accordance with the sanctioning organization's bylaws. Penalties may include suspensions, fines, loss of points, disqualifications, or any combination thereof. The nature of the penalty is determined by the gravity of the offense and its effect on the safety and good reputation of snowmobile racing. The violations hereinafter set forth are subject to the penalties noted.

EJECTION FROM RACE SITE

1. The Race Director has the right to eject any person(s) from the pit, paddock (staging area) or racetrack area.

CONDUCT OF PARTICIPANT (OFFICIALS, DRIVERS, CREWS, ETC.)

1. Participants are solely responsible for the condition of their snowmobiles and their competence to operate them.
2. No driver may, at any time, ride/drive in such a manner as to endanger life or limb of other riders, officials, or the public.
3. Vulgarity, derogatory or offensive language will result in disciplinary action, ejection from race site and be subject to fines and penalties.
4. Any participant that threatens bodily harm or assaults any official, driver, crew, etc. will be subject to disciplinary action, ejection from race site and be subject to fines and penalties.
5. Clothing displaying vulgar language is not allowed.

DRIVER LIABILITY RELEASE COVENANT NOT TO SUE

1. ***The driver/pit crew, in filing an application to enter the event, elects to use the course of the event at driver's /pit crews own risk, and thereby releases the sanctioning organization together with their heirs, assigns, officers, representatives, agents, tech personal, employees, and members, sponsoring organization and owners of properties on which sanctioned events are to be held from all liability from injury to person, property and/or reputation from tech decisions that may be received by said entrant and from all claims of said injuries to the parties listed above growing out of, or caused by any construction or condition of the course over which the event is held and or piece of equipment that participant entered into competition.***
2. ***Drivers/pit crew and other participants further acknowledge and fully understand that there may also be other risks that are not known or foreseeable at this time, and the above and released persons cannot control these risks, nor have the released persons judged the participants' skill level or ability prior to allowing the participants to participate and consequently is not in a position to guarantee the participants' personal health or safety during the programs, events or activities. DRIVER/PIT CREW KNOWINGLY AND VOLUNTARILY ASSUMES ALL SUCH RISKS, BOTH KNOWN AND UNKNOWN, ANTICIPATED AND UNANTICIPATED, EVEN IF ARISING FROM THE NEGLIGENCE OF THE RELEASED PERSONS OR OTHERS, AND THE PARTICIPANTS ASSUME FULL RESPONSIBILITY AND LIABILITY FOR THE PARTICIPANTS' PARTICIPATION.***
3. ***In consideration of permission and as a requirement of participation in sanctioned events, drivers, pit crew and other participates hereby covenant and agree not to sue the sanctioning organization, or its heirs, assigns, officers, representatives, agents, employees, and members, sponsoring organization and owners of properties on which sanctioned events are to be held, and further agree to fully release, indemnify and hold harmless those persons from any and all causes of action, demands, claims, and loss of injury to person or property or damages, of any nature whatsoever, whether the participation is supervised, unsupervised, however the injury is caused, including, but not limited to the negligence of any released persons.***

Sno Cross 2026-2027

DRIVER RESPONSIBILITY

1. The driver has the responsibility for the actions of his crew. It is the driver's responsibility to see that all crewmembers are aware and abide by all rules and guidelines.
2. The condition of a snowmobile is the responsibility of the driver. A driver may be disciplined if a driver's snowmobile is modified to defraud the officials or other competitors.
3. Regarding violations of teams concerning operation of, parking of, reckless operation of support vehicles, the driver may be penalized points, starting position, or given financial penalties, at the discretion of the affiliate.

FRAUD, BRIBERY & ILLEGAL ASSISTANCE

1. In addition to non-compliance with any of the above regulations or rules, the following offenses shall be considered a breach of regulations subject to disqualification.
   a. Bribing or attempting to bribe anyone connected with the race or accepting or offering to accept a bribe.
   b. Competitor accepting any kind of assistance that aids in snowmobile operation during the race.
   c. Any fraudulent proceedings or act of prejudicing the interest of the race.

INTOXICATING BEVERAGES & DRUGS

1. Drinking of intoxicating beverages is strictly forbidden by any participant. Anyone showing evidence of having used an intoxicating beverage must leave the premises (specifically pit, paddock (staging area), warm up area, tear down and racetrack) immediately and be subject to disciplinary action by the disciplinary committee. This shall be in effect through the final inspection of snowmobiles.
2. Possession or use of illegal drugs or drug substances, as defined below, is prohibited in any form, by any participant, on the race facility, or in any area considered to be used in the operation of the race facility, such as parking lots or leased properties.
3. Illegal drugs are these substances defined and prohibited by state/provincial and/or federal law.
4. Any person found to be in possession or under the influence of an illegal drug or drug substance on race facility property, as defined above, or any person who is arrested by duly constituted authorities and charged with possession and/or use of illegal drugs or drug substance or any person who is formally charged by a court of law with illegal drug violations, shall be subject to suspension from competition and eviction from the race facility, and denial of further entry to the race facility for a period determined by the disciplinary committee.
5. Any participant who is formally charged by a court of law with an illegal drug violation, upon notification to the ISR Advisory Board, shall be suspended from all forms of participation at any ISR event until such time as the charges are fully adjudicated through the legal process. Any conviction of a formal drug charge by such will be prohibited from taking part in any ISR or affiliated event for a minimum period of three (3) years from date of conviction.
6. Any participant suspended for violation of these rules may be granted an appeal hearing by a board of officials designated by the ISR Advisory Board, provided the suspended participant requests such hearing in writing, within fourteen (14) calendar days of the date of suspension. It is the responsibility of the suspended party to make such a request if a hearing is desired.
7. The cost of convening the board of officials will be borne by the participant prior to the convening of the board.
8. A participant suspended for violation of these rules, EXCEPT IN THE CASE OF PERSONS CHARGED WITH SELLING DRUGS, may, as the result of a decision reached through the hearing process detailed above, be reinstated, if it is mutually agreed that the participant (at his own expense) will produce documentation from a physician licensed within the state or province, certifying that he or she is drug independent, as a result of random and periodical examinations and urinalysis testing made at the request of the ISR Advisory Board.
9. If a participant is using prescription drugs on advice of a physician, such use must be reported to the Race Director prior to the participant's entry into any ISR activities. Failure to notify will subject the participant to penalties as prescribed above.
10. A participant is any person taking part in any event sanctioned by or affiliated with International Snowmobile Racing, Inc., in any form, including but not restricted to drivers, snowmobile owners, mechanics, crew members, sponsors, track officials, pit area personnel, manufacturers and press representatives. All such persons shall be considered public figures that have by their own choice become involved in the snowmobile racing events, with the full understanding that he or she must abide by the rules and regulations established and published by ISR. All participants are responsible for their personal conduct.

RACE DIRECTOR AUTHORITY

1. The Race Director and Technical Director will be certified by the sanctioning organization. (Certification is every other year)
2. The Race Director shall be responsible for the conduct of the race. He shall have the right to make the final determination concerning all aspects of the race and the race facility, including design (these rules and regulations notwithstanding). The Race Director is defined as the overseer/controller of the actual track operations during an event. He has prevue over all aspects of the race and interpreting rules that are applied. He may be a track owner/ or contract manager of a facility, however, "Race Directors" that are of administrative or business side of the event, although they may be referred to as race directors are not the on-track event director. In any case ISR certification is required.
3. He shall have the voice of authority to discipline the participants for violation of the rules. Such discipline will be limited to disqualification of a participant and/or exclusion from an event.
4. Official race results shall be approved by the assigned Race Director and a signed copy will be returned to the promoter for announcement and distribution.

Sno Cross 2026-2027

5. Race Director may not have vested interest in the outcome of an event over which he/she officiates. He/she may not officiate over a class in which he/she has a vested interest.
6. Race Directors may compete in events other than those in which they officiate.
7. 4.The Race Director may cancel any race or the complete event for reasons of safety regarding competitors or spectators, and in such case shall determine the awards, if any. The Race Director may shorten the race for any reasons of safety but must give drivers adequate notice in advance
8. A Race Director may judge the mechanical integrity of all timing equipment.
9. Only Drivers (no other participants) will have discussions with the Race Director about protests, and driving complaints, etc., and may approach the Director before the day's events, after an event, or at the direction of the Race Director.
10. The Race Director has the authority to judge the racing abilities of competitors and take appropriate action to ensure the safety of the event.
11. The Race/Tech director shall have the authority to determine structural integrity.
12. The Technical Director shall carry and be responsible for the official specifications and certain instruments for measurements concerning verification and control of contestants' snowmobiles. The Technical Director may not officiate over a class in which he has a vested interest.
13. Technical equipment and specifications will not be used for any purpose other than the conduct of the sanctioned event.
14. Decisions of the Race/Tech Director may be reviewed by the board of the sanctioning body.
15. Decisions made at an event shall not be overturned without a formal appeal. Notice of the appeal process shall be given and a suitable period for all parties to prepare must be allowed.

No express or implied warranty of safety shall result from publication of or compliance with THE RULES and regulations IN THIS PUBLICATION. They are intended as a guide for the conduct of the SPORT AND are in no way a guarantee against injury or death to spectators or participants.

SNOCROSS

SNO-CROSS COMPETITION

The intent of these classes is to establish races in which all can compete at their level of personal and equipment ability. The class structure is organized in such a way as to enable as many snowmobiles as possible a place to successfully compete. If class rules are not followed, the class name shall not be used, and the class shall be run as a specialty class with ISR's prior approval. Competitors must be 18 years of age to compete in senior classes. (For Junior information, see JUNIOR COMPETITION section.)

NATURAL TERRAIN SANCTIONS

A natural terrain Sno-Cross event is run on a closed course of no more than one mile per lap. The course can be on land or lake ice surface covered with snow and include a series of turns, bumps, and jumps. The course shall be designed to challenge driver skill and snowmobile maneuverability within the established safety guidelines. (See course diagram in the Appendix.) Course design, length and width may vary, but must be approved by the Race Director.

SNO-CROSS RACE DIVISIONS

Pro
Pro-Lite
Sport

PRO DIVISION CLASSES

SS 600	Stock up to 600cc liquid 2-stroke
SS 600 Women	Stock up to 600cc liquid 2-stroke
SS 600 Masters	Stock up to 600cc liquid 2-stroke
Pro	Up to 600cc liquid 2-stroke or approved four-stroke.

PRO LITE DIVISION CLASSES

Sno Cross 2026 -2027

Pro Lite SS 600	Stock up to 600cc liquid 2-stroke or approved four-stroke.

FOUR STROKE DIVISION CLASSES

CLASS	CC - MAX	EFI/CARB	EXH
1200	1200	OEM	OEM

SPORT DIVISION CLASSES

Sport SS 600	Stock up to 600cc liquid 2-stroke, Or approved four-stroke
Women's	Stock up to 600cc liquid 2-stroke **Or approved four-stroke**
Master's 600	Minimum age is at the discretion of the circuit

SPECIAL SANCTIONS

1. Can be any Sno-Cross event or class that does not fall under natural terrain sanctions and/or any of the specified divisions or classes, but meets established safety standards, applicable laws and/or approved insurance coverage.
2. All special sanctions and specialty classes must be approved in writing by ISR before competition.
3. ISR will not sanction or approve any class that features two-stroke snowmobile engines with displacement over 600 cc.

SPECIALTY CLASSES

PRO Am Women's 600 Stock
PRO/AM 600 stock
PRO/AM Lite 600 Stock
Women's Pro 600 Stock
Women's Semi Pro 600 Stock
Women's Sport 600 Stock
Master's Sport 600 Stock
Non-Traction/Trail
Transition 600 Stock (Regulated ecu 50% Throttle

FOUR-STROKE ENGINES

1. TO BE ELIGIBLE FOR COMPETITION, A FOUR-STROKE POWERED SNOWMOBILE MUST BE CLASSIFIED THROUGH THE ISR FOUR-STROKE CLASSIFICATION PROCEDURE.
   NOTE: See Stock Class and Open class rules for 4-stroke limitations.

ENTRY LIMITATIONS

1. Drivers may enter in more than one division. Driver movement between the following driver divisions during the event is allowed: Sport, Pro Lite and Pro. Drivers may enter two consecutive divisions.
2. Points for all events will be regulated by the regional competition or sanction committee.
3. Points will be tabulated in the region that they are awarded. Points are non-transferable between regions. Driver must be a member of the region to receive high point awards.

GENERAL COMPETITION AND SAFETY REGULATIONS

1. Race Director will determine the number of competitiors that can be safely on the course at one time.
2. PASSING – A driver must always be prepared for another snowmobile to pass and must therefore be on the lookout for other snowmobiles approaching from behind. Drivers will not hinder or obstruct an overtaking vehicle. A slower driver is to move over for the passing snowmobile.
3. A yellow flag indicates an accident or other incident that may include obstruction of the racetrack.

Sno Cross 2026-2027

a. Yellow flag zone is that portion of the track from the first yellow flag to a point past the entire incident.
b. Drivers must slow down and observe caution while in the yellow flag zone.
c. No passing allowed in a yellow flag zone.
d. No jumping or leaving the ground in a yellow controlled area is allowed.
e. Racing may be resumed after leaving the yellow flag zone.

4. DRIVERS RESPONSIBILITY – It is the driver's responsibility to inform the nearest race official of any injured drivers on the racecourse.
5. All animals at the race site must be leashed.
6. Drivers and crews are required to conform to sponsorship agreements if driver's number system is not compromised. Recommended size for any sponsor's emblem should not exceed sixteen (16) square inches on the front or twenty-four (24) square inches on the back of the driver's uniform.
7. It is highly recommended that trackside officials, press and observers wear upper body protection and helmets.
8. It is highly recommended that the red flag be displayed, and the race stopped when the medical staff is on the track or in unsafe proximity of the track.
9. Radio communication between crew and driver not allowed. Race-Ceiver and similar one-way communication may be utilized at the discretion of the affiliate.
10. **Drivers, crew members, team owners, staff, and support people may not be physically on the race surface at any time once an event has started. This includes walking the track to inspect for changing track conditions and other concerns. Anyone doing so will be penalized at the race director's discretion. Penalties may range from a verbal warning to ejection from the facility.**

REGISTRATION-ENTRY REGULATIONS

1. All entry fees must be paid in full before driver can practice or race.
2. Any class event can be eliminated when there are less than two (2) official entries at the close of registration.
3. Entry fees will be regulated on a regional basis.
4. Payback – Payback in Sport classes is limited to trophies only. Payback in all other classes will be regulated on a regional basis.
5. Drivers may be assessed a late registration fee.
6. The driver's number shall be displayed on both sides of the snowmobile in 6 to 8-inch-high, black numbers on a white background. (Suggested on the front portion of hood or windshield.)

SNO-CROSS VIOLATIONS

1. Driver Infractions/Disqualifications in a Sno-Cross event will be forwarded to ISR.
2. DRIVER MAY BE DISQUALIFIED FOR:
   a. Running without a **(Left Side Panel)** in position.
   b. Running with altered numbers.
   c. Running with bibs not in position.
   d. Receiving unauthorized assistance.
   e. The driver or a group of drivers attempt to harass race officials, in any manner.
   f. Course cutting.
   g. Dangerous driving tactics.
   h. Failure to stop for Post-Race Technical Inspection.
   i. Failure to use proper safety equipment.
   j. Unsafe operation in the pit area.
   k. Allowing non-registered drivers to operate driver's snowmobile on track during a practice lap or during race.
   l. Support vehicle parking, operating recklessly, endangering other support vehicle or foot traffic, by team member or driver.
3. DRIVER MAY BE PENALIZED AT START OF RACE FOR THE FOLLOWING:
   a. Jumping the start.
   b. Causing a restart.

Sno Cross 2026-2027

GENERAL SNOWMOBILE REQUIREMENTS

SKI SUSPENSION AND STEERING

1. Maximum ski stance is 43.5 inches measured under the spindle. Carbide runner must be centered on the ski board.

SKIS & SKI RUNNERS

1. Aftermarket skis allowed. Skis must be commercially available.
2. Minimum ski width is 3 ½ inch. Main keel and ski runner (cutting edge) must be centered on ski board. Main keel maximum depth is 1 ½ inch (without ski runner). Other keel(s) maximum depth is 5/8 inch. No sharp edges allowed on ski.
3. Skis may be reinforced on the topside only. Skis and ski loops must conform to the ski rules in GENERAL RULES AND REGUALTIONS section. Skis and ski loops must be intact at the start of each race. In the interest of safety, a driver may be black-flagged if a ski or ski loop is damaged in such a way as to cause a hazard. Ski loop leading edges not one (1) inch in width or not meeting the minimum radius rule must be padded.
4. Ski skins allowed.
5. Ski runner must be commercially available.
6. Only one cutting edge allowed. Minimum cutting angle is 60 degrees. No grinding or modification of host bar or cutting edge allowed.
7. Host bar may be any shape that conforms to rules. Except for cutting edge and groove for affixing cutting material, all edges must have a minimum radius of 45 degrees chamfer of 1/16 inch (see illustration).
8. Shape of host bar and cutting edge must limit penetration to 3/16 inch. Shoulder required adjacent to cutting edge if host bar is not round or oval. Minimum radius of round or oval host bar adjacent to cutting edge is 7/32 (0.219) inch.
9. Maximum height and width is 5/8 inch. Minimum width adjacent to cutting edge is 3/8 inch for host bar, which is not oval or round. Ski runner must fit within 5/8-inch square (see illustration).

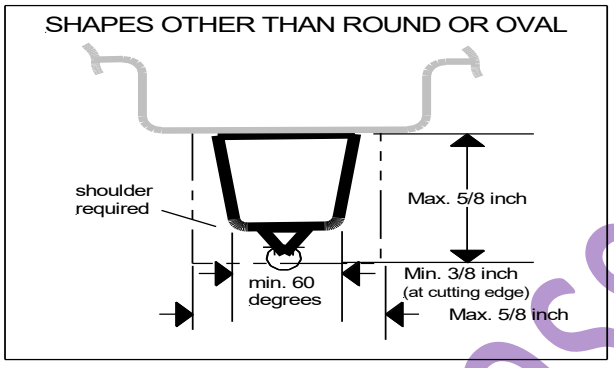

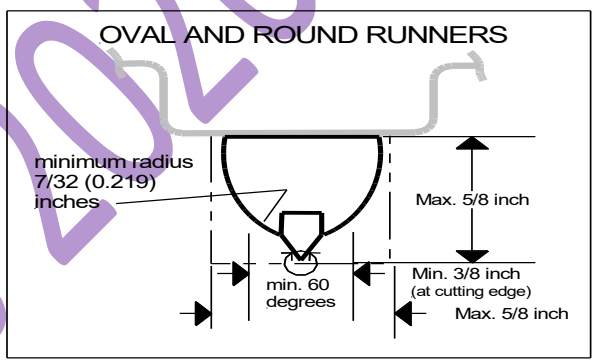

10. Ski Turning Plates may be used but must fit inside the following guidelines.
    a. Plate can be no longer than 18”.
    b. Plate can be no higher than 4”.
    c. Plate may not extend past side of ski.
    d. Only UHMW material may be used.
    e. Must be commercially available.
    f. All exposed edges must be relieved and have no sharp edges.

SnoCross 2026-2027

11. ISR Rules Committee may determine compliance of a product or products introduced during the race season.
    a. The production ski loop design offered by BRP (Ski Doo) is legal for competition. Part numbers vary by production years. See following photo.

Maximum ski trimming (for the rear of the ski): From rear of ski. Both sides can be trimmed to a maximum of 9 inches forward. The rear of ski can be trimmed to a minimum of one inch in width. Rear tip corners should have a rounded radius. Ski material can be removed if it does not affect the overall length and width of the ski. Ski keel material can be removed to except ski runner.

TRACK & TRACTION

Notice

Effective 2020 season, maximum track dimensions shall be 138 inches long, and 15 inches wide for all stock class snowmobiles.

1. Maximum track lug height in all classes is 1.75 inches.
2. Regardless of track length or width, snowmobile is limited to 108 sixty (60) degree unsharpened, unmodified single point picks/studs. Each single point stud must be attached to the track individually with the shank of the stud attached to a head/stud support on the inside of the track. Single or double-point backer plates will be used on the outside of the track to support the single point studs. (For each stud point contacting the ice, each stud must have its own shank and own head.)

Studs must conform to illustration below.

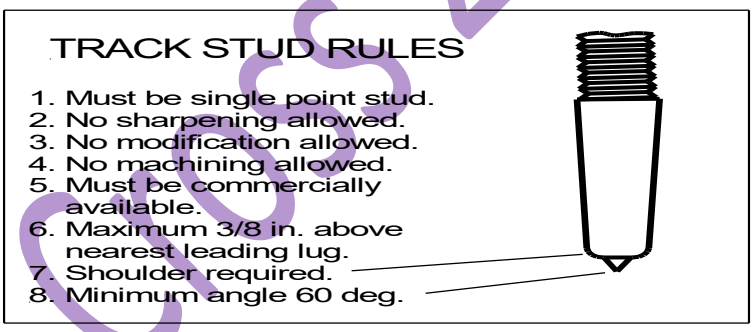

3. Studs must be steel, with a carbide insert.
4. All components of the traction devices must be in the center of the track between the inside edges of the two slide runners (hyfax) and a minimum of 3.75 inches from the edge of the track (4.25 inches from the outside of the stud itself).
5. Stud backing plate max. size: 2-inch-wide X 2 ¾ inches long X 1 ¼-inch-high, and not to exceed the height of the lug. Backing plates must be commercially available and must not be modified. Stud backing plates may be horizontally, vertically, or obliquely shaped within the 23/4X2X11/4 dimensions.
6. Backing plates must be fastened to the track with a stud or a stud/nut assembly. No sharpening (vertically or horizontally, or obliquely) of the backing plate.
7. All studs must be directly aligned with a “leading” rubber lug and no more than 11/4 inches behind the leading lug. The 3/8-inch maximum penetration measurement will be taken off the top of the leading lug. The two measurements are taken parallel to the edge of the track and parallel to the flat of the track.

Sno Cross 2026-2027

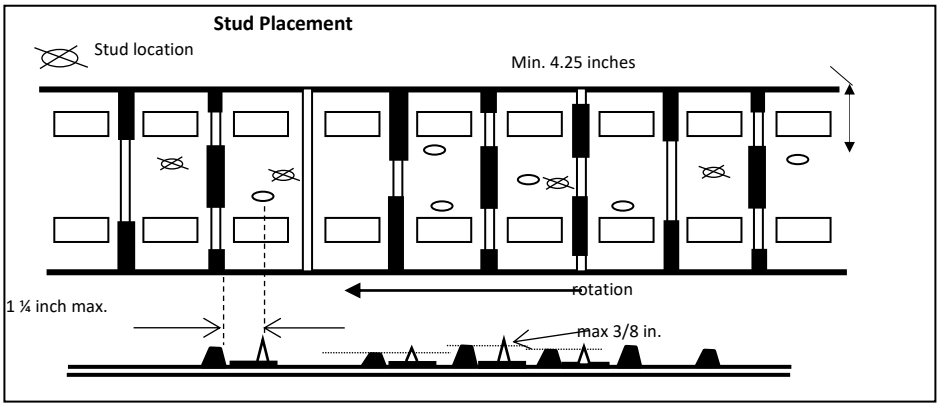

8. The stud must be a minimum of 4.25 inches from the edge of the track measured parallel to the surface of the track and from the track edge to the outside edge of the stud shaft.

FRAME AND BODY

1. Dulled foot traction devices allowed on the running boards.
   a. ON THE FLAT OF THE RUNNING BOARD – traction devices must be dulled and be no higher than ½ inch above the flat of the base of the traction device.
   b. ON TOP OF THE ROLLED EDGE – traction devised must be dulled and be no higher than ¼ inch above the top of the rolled edge of the running board.
   c. The traction device may extend a maximum of ¼ inch beyond the side of the rolled edge for mounting. There shall be no sharp edges to the side of the rolled edge.
   d. Foot stirrups and side tunnel traction pads may be added.
2. Running board extensions are not allowed.
3. The rear snow flap must be in contact with the course surface when driver is seated.
4. The rear snow flap must be constructed of a semi-rigid material such as HD polyethylene or UHMW polyethylene.
5. Extra hood tie-down straps can be added, and existing hardware can be changed to accept new straps
6. Orange is not allowed on snowmobiles in Sno-Cross racing.

SPECIAL NOTICE:
All Sno Cross Classes must use this configuration.
IMPROVED SNOW FLAPS IN RETENTION AND THE ABILITY TO DEFLECT ROOST.

1. A rear snow flap of sufficient material must be installed in a permanent manner and shall be held down (restrained from rearward movement) to restrain traction components, snow, mud, rocks, and other material thrown from the track at all speeds.
2. The snow flap must overlap the widest part of the rear tunnel opening by at least one inch on each side.
3. The snow flap must be in contact with the course surface when the rider is on the snowmobile.

1. Snow flap design and installation will be as follows:

   Snow flaps need to be made from .125 UHMW or HDPE plastic, cut in the shape/silhouette of the OEM 2021 snow flap. Additionally, an 8-inch-wide strip of the same material must be fastened to the snow flap, centered on the flap, and full length of the OEM flap. This reinforcing panel must be fastened to the snow flap with a minimum of eight (8) 3/16 diameter rivets, (steel or aluminum) placed 10 inches

Sno Cross 2026-2027

apart, one inch from the outside edge of the panel and an additional rivet centered both top and bottom of the reinforcing panel of the snow flap. The rivets must have a minimum one half (½) inch head and a corresponding ½" outside diameter washer on the expansion side.

2. The snow flap may be of any color except orange but must be of .125 UHMW or HDPE.
3. The snow flap must have the lower two (2) inches of the flap bent at a 45-degree angle and mounted with the bend area facing the track/chassis/

4. The snow flap will be fastened to the chassis/tunnel in the manufacturer's normal methods and design. If this method proves failure prone a method for the individual brand will be dictated.
5. The retention device material must be the limiter strap from each brand sled, (for the initial phase of this rule, if this material proves to be prone to failure, other material will be specified) to retain the flap in an effective operating position. The retention strap mounting holes must be a minimum of 1 ½ inches in from the left and right edges of the snow flap and must be fastened through the flap with 5/16 Allen head cap screw fasteners, with 2" by 1/8 in thick fender washers or an approved stud backing plate on each side.
6. The amount of angle that the snow flap may deflect /rotate in competition shall be 45 degrees maximum.

2. The attachment point of the retention strap to the snow flap shall be a minimum of 10 inches from the top of the flap. The retention strap shall be fastened to the snow flap in a position greater than 10 inches to control the flap in the following manner. The snow flap must touch the racing surface with the driver seated and the sled not in motion. When in motion the snow flap shall not extend at an angle greater than 45 degrees from the chassis. The intent of the snow flap is to limit snow and debris discharge onto competing drivers. Allowing the flap to extend beyond that dimension or any other method of defeating the effectiveness of the flap will be a disciplinary action. Observation by Race Director, Tech Director, or Course workers will be the control factor and will not be subject to appeal.

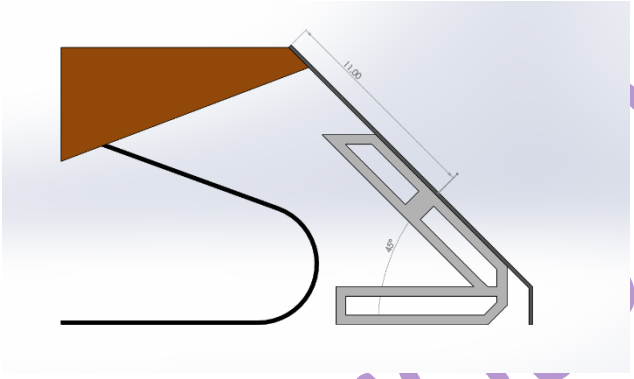

3. Location of where the limiter strap mounts to the tunnel will be at builder's discretion but must have 2 inches of chassis material minimum at the point it is mounted.
4. The snow flap will be fastened to the chassis/tunnel in the manufacturer's normal methods and design. If this method proves failure prone a method for the individual brand will be dictated.
5. Appropriate technical inspection gauges will be constructed to allow the technical inspector to determine compliance to the above rules and mounting criteria.

IGNITION AND ELECTRICAL

1. Lighting – Taillight must always be operational. Headlights not operational at the start of the event will be allowed to compete but must be repaired before the next heat/final is entered. Light failure during a race is not grounds for disqualification.
2. Data acquisition systems and data acquisition allowed.

SAFETY SWITCH

1. A functional and operational secondary safety shutoff switch (kill switch) that will terminate ignition is mandatory in all classes. The switch must be located on the right side of the handlebar. The switch may be either the "click-on, click-off" type or the spring-loaded, push and hold type.

TETHER SWITCH

1. The tether cord will be securely fastened to the driver. D rings/tabs on gloves and jackets are not designed for the abuse encountered during competition and accidents. It is required have your tether cord mounting location on your jacket or upper body protection in a reinforced area. A race or tech director may disapprove of the attachment method at any time. Drivers will not be allowed to compete until the attachment situation is rectified.
2. In the event of a driver/operator becoming dislodged from his snowmobile or a crash and the engine continues to run or the tether (safety disconnect) switch fails to function or is not properly fastened/attached to the driver/operator while the engine is running, the driver will be disqualified from the heat in which the infraction occurred.

Sno Cross 2026-2027

STOCK CLASS RULES

In stock and stock-based classes, no change or modification is allowed unless specifically allowed by these rules. If these rules do not specifically allow a change or modification, then it must be assumed that the change or modification is not allowed.

GENERAL RULES

1. The snowmobile must have original OEM engine, hood, intake, exhaust, frame, suspension, hood, and drive. Named components must be OEM for the model and year, or properly filed OEM replacement parts that supersede the original OEM parts.
2. Super Stock 600 engine limitations for 2-stroke powered models.

Maximum displacement	600 cc
Number of cylinders	2
Maximum effective compression ratio	6.8:1 ± 0.2
Maximum carb size	40 mm
Maximum EFI size	See sub a. below

   a. Maximum carburetor bore: 40 mm. *Maximum EFI throttle body bore: 48 mm.*

3. Super Stock 600 engine limitations for 4-stroke powered models.

Engine Layout:	In-line 3 cylinder without drive clutch gear reduction.
Minimum Stroke:	66mm
Maximum Displacement:	1050cc
Maximum carburetor bore	40mm
Maximum FI throttle body bore	44mm
Max. compression ratio	11.8 to 1

FOUR STROKE CLASSES

Naturally aspirated only.

Class	CC - Max	Carb/ EFI	Exh
Stock	1200 cc	OEM	OEM

Sno Cross 2026-2027

FOUR STROKE ENGINES

1. To be eligible for competition, a four-stroke powered snowmobile must be classified through the ISR four- stroke classification procedure for competition in a two-stroke class.

ENGINE

1. All engines will have an OEM tag and/or serial numbers affixed to the engine.
2. No component of the engine may be altered changed or enlarged from the engine manufacturer's original stock specifications, nor may any additional components be added to the engine. Blueprinting is not allowed. No removal of material whatsoever will be allowed. This is to include polishing, port matching, deburring, glass or sand blasting surfaces or material removal for the purposes of engine balancing or other reasons.
3. Maximum cylinder overbore for wear or cylinder repair cannot exceed .020 inch (0.50mm).
4. Stock OEM for the model pistons only are allowed for replacement.
5. There will be no more than one-cylinder base gasket to a cylinder. No changes in engine dimensions can be made by gasket adjustments.
6. Rotary valve timing/duration must remain as filed by the manufacturer.
7. OEM carburetor slide valves and replacement jet options are allowed without modification.
8. The throttle lever and throttle lever assembly may be modified or replaced. The OEM position on the right-hand handlebar must be maintained and the throttle lever must be thumb operated with a direct mechanical mechanism to the engine.
9. An adequate return spring on the throttle is required.
10. Choke mounting location may be moved for driver comfort. Choke system may be disconnected.
11. No pressure charging allowed.
12. The engine air intake system is to include any: cowl vents, airbox, noise reducing foam (cowl vents & airbox), carb boots, carburetors, clamps, rotary valves, reed valves, carburetor flanges, and oil injection nozzles that are original OEM equipment for that make and model. No changes or modifications can be made to any part of the engine air intake system or mounting locations.
13. Deep snow cover/foam must remain in place.
14. Engine must remain in OEM for the model mounting location. Engine mounts must be OEM for the model. No additional engine torque limiters (including torque stops, torque bumpers) allowed.
15. No pressurization of fuel tanks or lines allowed.
16. Fuel lines must be routed and protected to prevent damage from other components.
17. No additional engine cooling systems allowed.
18. If oil injection is OEM standard, oil injection system and all associated components must be installed in their OEM configuration but may be disconnected. Oil injection nozzles may be removed or plugged. Premixed oil and fuel may be used.
19. Spark plugs do not have to be OEM.
20. The exhaust system is to include any, header flange or pipe, Y pipe, expansion chamber, pulse charger, muffler, and tail pipe that are original OEM equipment for that make and model. No alterations to these components are allowed.
21. Bungs may be welded anywhere in the system for data acquisition. Original bungs, and mounting surfaces for any OEM data collection/O2 sensors must be maintained in original location.

DRIVE

1. Must have original OEM variable speed converters supplied by the manufacturer for that make and model. Named components must be OEM for the model and year, or properly filed OEM replacement parts that supersede the original OEM parts.
2. No machining or grinding of any kind allowed on clutches unless specifically stated.
3. Any springs, weights or ramps may be used. No clutch engagement RPM limit. ***(clarification You cannot change the number of spider rollers)***
4. No machining on clutches to accommodate springs and weights.
5. In the primary clutch, metal may be removed but not added to ramps or flyweights.
6. Secondary clutch cams may be cut to any angle. Billet helixes allowed.
7. No overdrive machining.
8. Drive belts do not have to be OEM.
9. Chain case must be original OEM for the model equipment. Must remain in original mounting location. Chain tensioner may be changed to any OEM equipment.
10. Any drive chain and sprockets may be used. Any belt drive belts and drive cogs may be used. (Belt drive system must be original OEM)
11. Track drive axle and sprockets must be OEM for the model. Sprocket diameter may be trued round.
12. Brakes systems may be changed or altered but must be always operational. Brake components must be commercially available. Brake disc may not be relocated and must remain in stock as produced location. Liquid cooled systems allowed. Brake disk may not be modified in the pad contact areas. Brake disk hub may be modified for mounting. OEM diameter and thickness must be maintained, (Clarification) {Larger / thicker are acceptable, but not smaller / thinner. } The brake disk material may not be substituted with any other material. Aluminum and/or carbon brake disks are not allowed.

Sno Cross 2026-2027

13. The disk pad contact surface area may not be reduced more than 15% of the original pad contact surface area.
14. Brake control handle must remain in OEM location on the left, front side of the handlebar.
15. Existing vents may be used to direct cooling air to the brake components. Brake disk shall not extend outside of the bodywork. Venting for brake cooling is allowed.
16. An auxiliary brake cooling fan of up to 4" diameter is allowed. Properly constructed ducting, hose routing, and electrical wiring, to facilitate this installation will be determined by the technical inspector. Inspectors' decision is final. All venting for brake cooling purposes must contain and direct airflow to the brake caliper and disc assembly only. Any specialized vents that allow outside cooling air beyond the brake system or derive cooling air from the vent before it travels to the brake system is not allowed**.**

SKI SUSPENSION & STEERING

1. No substitution of material allowed on front suspension. Must remain in original mounting location in both bulkhead and spindle housing.
2. Sway bar may not be relocated. Sway bars must be OEM for the model, or other sway bar from another stock qualified model within the brand. Sway bar may be disconnected or removed. If disconnected and not removed, all remaining components must be secured so as not to endanger driver or other drivers.
3. Must maintain two (2) inches of remaining compression travel with driver on snowmobile.
4. Reinforcement of components is allowed by welding or bracing. Structural integrity must be maintained. See Frame and body #19.
5. Spindles may not be shortened.
6. Any spring may be used on the suspension. May be shortened or heated. Springs may be removed and replaced with another type of cushion device.
7. Any shock allowed. Replacement may be shorter than OEM for the model shock but may not be longer.
8. Handlebars must be intact at the start of each race day. Any commercially available handlebar allowed. May be altered to fit the driver. Open ends must be capped. Handlebars must be padded. Column or post must remain in its OEM position. Grips may be modified or replaced.
9. Commercially available handlebar risers, vibration mounts and relocation mounts allowed. Handguards allowed.

SKIS & SKI RUNNERS

1. Aftermarket skis allowed. Ski's must be commercially available. Ski, ski hoop, and ski runner must conform to General Rules and Regulations.
2. Skis may not be interchanged between brands.
3. May reinforce skis on the topside only.
4. Maximum ten (10) inch turning material per ski. Turning material must be continuous.
5. Ski skins allowed.

TRACK SUSPENSION

1. Suspension must be OEM for the make and model. Track suspension may be located anywhere in the tunnel where the manufacturer has drilled, partially drilled, or marked for mounting holes. No substitution of material allowed.
2. Reinforcement of components is allowed by welding or bracing. **See Frame and body #19.**
3. Rails may not be bent or shortened.
4. Marginal snow wheels may be added or removed along with mounting brackets from an OEM wheel kit. Wheel diameters may be trued round**.**
5. Slide rail lubrication will not be allowed.
6. Any hyfax allowed.
7. Any shock allowed. Replacement may be shorter than OEM for the model shock but may not be longer.
8. Any spring allowed. Springs may be removed and replaced with another type of cushion device. Aftermarket torsion spring hangers allowed**.**
9. Springs may be shortened or heated.

TRACK & TRACTION

1. The track must be OEM for the model.
2. Track must remain as manufactured by the molder of the track. No trimming or shaving of the track grouser bars, rubber studs/snow lugs will be allowed.
3. No cleats or partial cleats may be added.
4. Any commercially available guide/track clips may be used. No traction devices may be added to track clips.
5. Tracks may not be reversed.

FRAME & BODY

1. All chassis will have OEM tags and/or serial numbers affixed to the frame.
2. Reinforcing by welding and/or bracing is allowed.
3. Removal of any material from total snowmobile by means of heat, acid, drilling, grinding, sandblasting, peening, substitution, or total elimination is not allowed.
4. Access openings may be added for component removal or service but must be closed when on the course. Closures must be made of original type materials.

Sno Cross 2026-2027

5. External vents/scoops must be OEM for the model. Vents may be covered or closed. No additional vents or scoops may be added for the purpose of engine cooling, air induction to engine carb or throttle body. Any additional scoop or vent that is deemed by the technical inspector to be performance enhancing will be required to be removed or defeated.
6. Internal crankcase cooling ducts must remain within the confines of the snowmobile and only use existing external vents.
7. Hood may not be removed.
8. Any windshield may be used. Windshield must have safety edging and be installed in stock location.
9. Seat must remain OEM for the model. Padding may be added or subtracted to improve driver comfort and safety. Seat must remain in OEM for the model location. Must be upholstered.
10. Insulation may not be removed.
11. Skid plates may be added for protection of snowmobile bottoms. Skid plates must be securely fastened.
12. A cushion may be added directly under the engine. Must be affixed to the frame. No change in engine location allowed.
13. Additional plate material may be added to the tunnel at the suspension mounting holes.
14. It is highly recommended that the sides of the rear tunnel opening be enclosed with comparable tunnel material. The tunnel covering is required to keep a ski or driver's extremities from entering the tunnel area.
15. Tunnel protective wear strips may be added, removed, or altered. Liquid spray coating allowed.
16. Front and rear bumpers must remain stock.
17. Fuel tank must be OEM as supplied with the snowmobile or opaque (translucent) as supplied by the OEM manufacturer. The translucent tank must be of equal dimensions and capacity to that supplied by the original OEM manufacturer. OEM fuel tank is the only tank that can be used to supply fuel to the engine.
18. Fuel lines must be routed and protected to prevent damage from other components.
19. Reinforcement of chassis, skid frame, (slide rail) tunnel, front suspension, rear suspension, must only be done with like material to original component. Only exception is aluminum can be reinforced with steel. No carbon fiber or titanium reinforcement allowed.
20. Body panels may be changed to alternate colors provided by the manufacture that are direct fit replacements for the OEM production panel. **If any side panel or hood components are replaced due to damage, the sound deadening foam is not required to be replaced. No other sound deadening or heat controlling foam or material in any other location may be removed.**

VENTING

Venting in Stock Snow Cross. Applies to all Snow Cross classes that use SS race sleds approved by ISR.
Manufacturers will be permitted to devise vent kits for Stock Snow Cross sleds to aid in controlling under cab heat, air movement and improve safety in the areas affected by the beyond design limits operating temperatures encountered in competition.

ALLOWABLE ADDITIONAL VENTING FOR All STOCK CLASS SNOW CROSS SLEDS.

1. An additional 36 square inches (area) of venting will be allowed/permitted.
2. Venting may be located anywhere in the cab/hood/ belly pan structure, including dashboard panel.
3. Venting may be utilized for air in or air out.
4. Venting shall not be directed, channeled, or ducted to specific areas. All venting must use natural airflow to cool or move air through the area attempting to cool or assist in airflow.
5. Size of venting in each situation is not dictated, but total vent locations must not exceed 36 Square inches in area, in excess of production venting.
6. Venting may be covered with "Frog Skin" or other like materials to prohibit snow ingestion.
7. These vents shall not be connected to airbox/plenum, or any other part of the intake system, regardless of design of the engine. (Carb or EFI)
8. All users must follow the manufacturer's approved layout of the venting and must adhere to size and location specified. No additional changes by the installer will be allowed. Manufacturers must provide instructions, template if necessary, and other info when venting is required. The manufacture can inform of this process by electronic communication.
9. Manufacturers can file only one update per model year/season.
10. Brake venting allowances are covered in specific brake venting rules, this is not to be construed as specific brake venting. Brake venting must be ducted to the specific location designed for cooling aid or assistance. SEE DRIVE section #15 and #16 of PRO STOCK RULES.

IGNITION & ELECTRICAL

1. Ignition must be OEM for the year and model. CDI/ECU module may be reprogrammed.
2. No aftermarket device allowed which interrupts ignition or controls the brake system for the purpose of launch control or traction control unless OEM for the model**.**
3. Wiring may not be removed.
4. Gauges/Instruments may not be removed. Instrumentation may be added but must not provide a safety hazard. Gauges may be disconnected but not removed.
5. Head, tail, and brake lights must be original OEM equipment. Must remain in original location, unless permitted by request to ISR from OEM.

Sno Cross 2026-2027

PRO LITE CLASS

PRO LITE CLASS MUST OBSERVE ALL STOCK CLASS RULES AND THE FOLLOWING ADDITIONAL SPECIFIC PRO LITE CLASS RULES.

1. All **Pro-Lite** sleds may use a commercially available aftermarket can/silencer. The silencer used may not be constructed of titanium or carbon fiber. The main exhaust system must remain stock and unaltered. This includes Y pipe, expansion chamber, pulse charger. No alterations to these components are allowed, to utilize an aftermarket can/silencer. Carbon fiber or Titanium materials are not allowed in construction of these components.
2. Tabs or brackets may be welded to the external body of the original exhaust system to facilitate the installation of the aftermarket can/silencer.
3. Stock and Modified Classes – Exhaust System Requirements

PRO CLASS

PRO CLASS MUST OBSERVE ALL STOCK CLASS RULES, AND THE FOLLOWING ADDITIONAL SPECIFIC PRO CLASS RULES.

ENGINE

1. All Pro sleds may use a commercially available aftermarket can/silencer. The silencer used may not be constructed of titanium or carbon fiber. The main exhaust system must remain stock and unaltered. This includes Y pipe, expansion chamber, pulse charger. No alterations to these components are allowed, to utilize an aftermarket can/silencer. Carbon fiber or Titanium materials are not allowed in construction of these components.
2. Tabs or brackets may be welded to the external body of the original exhaust system to facilitate the installation of the aftermarket can/silencer.
3. Stock and Modified Classes – Exhaust System Requirements

IGNITION AND ELECTRICAL

1. Head, tail, and brake lights must be original OEM equipment. Must remain in original location. Headlight must be covered and obscured. No light shall emit from the periphery of the lens during competition. Headlight bulb must remain functional and be activated during competition.

ADULT CLASS STRUCTURE ENDS HERE.

SNOCROSS JUNIOR CLASSES

JUNIOR CLASS RACING

NOTICE

Parents or guardians who knowingly enter a driver who is not of the legal age to compete in any of the specific classes offered in the Junior Division, will be subject to a $500.00 fine and one year suspension.

The driver also may be given a one-year suspension.

Affiliates who through negligence or not having an approved advancement system allow drivers under the age of 18 years of age to enter adult classes with out being certified through the advancement process may be fined $500 and possible loss of affiliation rights.

Advancement Procedure.

4. **No minors may enter adult classes until the age of 18, or if approved by the Advancement Procedure which is available starting at 14 years of age. You must be 16 years of to compete in a Pro class.**
5. **Each involved affiliate of the same discipline (example Oval Sprint) must either provide a qualification process, or declare to ISR they will observe other affiliates of the same discipline's advanced rider list. Affiliates with a qualified advancement program have the right to determine advancement of candidates as they see fit. Qualifying with one affiliate does not qualify the youth driver for all affiliates.**
6. **Affiliates may honor another affiliates advancement. Driver must present copies of the advancement prior to registration.**

Sno Cross 2026-2027

AFFILIATE RESPONSIBILITIES

5. **Before an affiliated sanctioning body may advance Junior drivers, it must have a bona fide junior program. The affiliate's Junior Competition committee /Representative is responsible for verifying a Junior's driving ability.**
6. **Junior competitors shall be required to perform practice laps/runs from time to time to allow race officials to observe their progress in learning the handling skills required to advance.**
7. **Junior advancement is at the discretion of the driver's classification committee and can be reviewed at any time. The committee has the authority to advance, demote or deny advancement to any driver. The decisions of the classification committee are final.**
8. **The affiliate board/driver classification committee will not advance drivers until all DRIVER/PARENTAL RESPONSIBILITIES have been fulfilled and all completed and signed documents are on file.**

DRIVER / PARENTAL RESPONSIBILITIES

WHEN AN ISR COMPETITOR REACHES THE AGE OF 14 YEARS AND QUALIFIES FOR JUNIOR COMPETITION, HE/SHE MAY BE ADVANCED UP TO THE NEXT LEVEL, BUT ONLY AFTER FULLFILLING ALL REQUIREMENTS BELOW:

(SEE ADVANCEMENT FLOW CHART FOR SPECIFIC CLASSES IN JUNIOR COMPETITION SECTION).

8. **A Junior competitor must compete in at least one entire event in a given class before becoming eligible for advancement.**
9. **Before a Junior may advance to a senior class, he/she must meet the Junior advancement requirements established by the affiliate's board/driver advancement committee.**
10. **He/she must petition the affiliate's board, in writing, requesting that he/she be allowed to advance.**
11. **The request for advancement must be accompanied by all new consent and release forms (as specified above).**
12. **The request must be approved in writing by the affiliate board to advance.**
13. **Before advancing to a Pro Division class, the Junior must be at least 16 years of age.**
14. **Parents may request for their child to stay in a lower class if they feel the driver needs more experience to develop track and driving skills. For Advancement application click here.**

VERIFICATION EQUIPMENT REQUIRED

In all ECU REV limited classes access must be provided for technical inspection purposes. Additional requirements to the data logging criteria and possible engine limitations may be implemented at any time.

1. Data logging in RPM restricted classes is mandatory and access to data logging equipment must be provided to technical inspection officials. Data Logging equipment must use OEM CAN protocols. This requirement is mandatory in National Events. Regional affiliates may offer a beginner class that will not require this equipment.
2. The penalty for violation of the correct data logging parameters will be a 3-event day suspension in the specific class for the first violation, and suspension for the balance of the season for any following event.

TRANSITION 9-13

SPECIAL NOTICE

ALL SLEDS UTILIZED IN THIS CLASS MUST BE NON-CURRENT, OR A MINIUMN OF (1) ONE MODEL YEAR OLD.

The rules committee may at any time during the racing season, review the restrictions of the designated models if a brand is dominating the class.

The following parameters must be adhered to:
1. This class is to be run as the only class on the racetrack. Designated sleds may be run together.
2. **The class is for drivers that are 9 years old and not yet 14 years old. (It is not open to younger or older drivers.)**
3. The snowmobile models eligible must be designated by ISR and the Rules Committee.

Stock legal production 600 cc Super Stock race snowmobiles will be the format for Transition classes. These sleds will be developed with specific manufacturer-based modifications and restrictions. The snowmobiles will be raced as produced with only the following changes.

1. This class will follow all the rules for the stock-based snow cross class.

2. ***Electronic control unit ECU will be reprogrammed with rev limit restrictions (rev limited to maximum 6500 RPM) (Exception Polaris and Arctic Cat rev limited to maximum 6600 RPM) (Exception Polaris 2020 and older sleds can be 6700 RPM)***

Sno Cross 2026-2027

3. Restricted throttle kit not to allow more than 50% throttle opening must be installed designated throttle kit part numbers will be supplied by brand.

4. The exhaust valves will be blocked in the shut position.

5. ***Primary clutch engagement will be 4000 Max RPM) (Exception Polaris and Arctic Cat rev limited to maximum 4100 RPM) (Exception Polaris 2020 and older sleds can be 4200 RPM) (measured with secondary Sheave movement)***

6. Rider, running board blocks can be used.

7. Programmable Tethers: Also, effective 1/3/2020 no competitor or mechanics in the transition class are allowed to possess a tether that is not programmed for the transition class when they are between their trailer-staging-racetrack-podium during any transition events or practice. If you are found with a non transition programed tether it is grounds for a DQ.

SLED CRITERIA

1. No studs are allowed in this class.
2. 1 ¾" tracks are legal for all sleds.
3. The sleds listed below are also approved to continue to run in the class following the stock – based Sno cross class rules and the limitations listed below.
4. Pre-Heat "hole shot" function must be disabled.

JUNIOR NOVICE 10-13 AND GIRLS NOVICE 9-12

SPECIAL NOTICE: SLEDS UTILIZED IN THIS CLASS MUST BE NON-CURRENT, OR A MINIUMN OF (1) ONE MODEL YEAR OLD.

The rules committee may at any time during the racing season, review the restrictions of the designated models if a brand is dominating the class. Stock legal production 600 cc Super Stock race snowmobiles will be the format for Junior Novice classes. These sleds will be developed with specific manufacturer-based modifications and restrictions. The snowmobiles will be raced as produced with only the following changes.

1. This class will follow all the rules for the stock-based snow cross class.
2. ***Electronic control unit ECU will be reprogrammed with rev limit restrictions (rev limited to maximum 6500 RPM) (Exception Polaris and Arctic Cat rev limited to maximum 6600 RPM) (Exception Polaris 2020 and older sleds can be 6700 RPM)***
3. Restricted throttle kit not to allow more than 50% throttle opening must be installed designated throttle kit part numbers will be supplied by brand.
4. The exhaust valves will be blocked in the shut position.
5. ***Primary clutch engagement will be 4000 Max RPM) (Exception Polaris and Arctic Cat rev limited to maximum 4100 RPM) (Exception Polaris 2020 and older sleds can be 4200 RPM) (measured with secondary Sheave movement)***
6. Studs are allowed in this class.
7. 1 ¾" tracks are legal for all sleds.
8. The sleds listed below are also approved to continue to run in the class following the stock – based Sno cross class rules and the limitations listed below.
9. Pre-Heat "hole shot" function must be disabled.

Performance Kits for 2009 – 2026 ARCTIC CAT ZR 6000 R SX

- **Junior 14-15 & 16-17:**
- **Part #** **Description**
- 1705-359 50% Throttle Block Kit including Calibration tool.

- **Junior Novice 10-13 Rules**
- **Part #** **Description**
- 1705-359 50% Throttle Block Kit including Calibration tool.
- **0708-664** Power valve Stop kit.
- CDI box must be re-programed to limit Max Engine RPM to **6600 RPM's** along with disabling the "HOT START" Function.
- Please ship CDI box to Arctic Cat Race Dept. 17442 US HWY 59 NE, Thief River Falls, MN 56701 Please include prepaid return Postage along with proper shipping address.
- **CLASS RULES:** 50% throttle block, **4100** Max clutch engagement RPM (no clutch calibration parts included)
- "HOT START" function must be disabled; Power valves must be positively locked in the closed position with a MAX of 6500 Engine RPM's.

Sno Cross 2026-2027

- **Transition 9-12 Rules**
- **Part #** **Description**
- 1705-359 50% Throttle Block Kit including Calibration tool.
- **0708-664** Power Valve Stop Kit
- CDI box must be re-programed to limit Max Engine RPM to **6600** RPM's along with disabling the "HOT START" Function.
- Please ship CDI box to Arctic Cat Race Dept. 17442 US HWY 59 NE, Thief River Falls, MN 56701 Please include prepaid return Postage along with proper shipping address.
- **CLASS RULES:** 50% throttle block, **4100** Max clutch engagement RPM (no clutch calibration parts included)
- "HOT START" function must be disabled; Power valves must be positively locked in the closed position with a MAX of 6500 Engine
- RPM's.

Performance Kits For 2010-2014 500 ARCTIC CAT Sno Pro & 2015-2017 ZR 4000 RR

- **Transition 9-12,**
- 50% throttle and 6500 MAX Engine REV Limit
- **Part #:** **Description**
- 0709-094 Includes Calibration Tool

ECU must be Re-programed for a **6600** MAX Engine RPM. Please ship CDI box to Arctic Cat Race Dept. 17442 US HWY 59 NE, Thief River Falls, MN 56701 Please include prepaid return Postage along with proper shipping address.

- **Junior Novice 10-13,**
- 50% Throttle Kit
- **Part #:** **Description**
- 0709-094 Includes Calibration Tool
- To Download Arctic Cats Part # list Click Here

Performance Kits for 2019-2025 Ski-Doo 600RS

Junior / Transition kit for 2019 - 2024

- PN 486900011
- Kit Contains: Calibration tool, Additional Tethers for Programming, Instructions.
- PN 486300091
- Kit Contains: Calibration tool, Additional Tethers for Programming, Complete Tuning/Gearing Set-up, Instructions.

2008-2016 POLARIS IQR 600 2024 600R

- **Junior 14-15 & 16-17**
- **Part #** **Description** **Kit consists of:**
- **0818029** 50% throttle block kit 50% throttle asm & calibration tool
- **0818017** 50% throttle block kit 50% throttle asm & calibration tool

- **Junior Novice 10-13**
- **Part #** **Description** **Kit consists of:**
- **0818017** Jr Novice restriction kit 50% throttle asm & calibration tool
- Exhaust valve block cap
- Clutch weights/spring
- (4100 max engagement)
- CDI box reflash

Sno Cross 2026-2027

- (6600 rpm limiter/no Dragon)
- Clutch weights/spring
- **Transition 9-12**
- **Part #** **Description** **Kit consists of:**
- **0818017** Transition restriction kit 50% throttle asm & calibration tool
- Exhaust valve block cap.
- Clutch weights/spring
- (4100 max engagement)
- CDI box reflash
- (6600 rpm limiter/no Dragon)
- To Download Polaris Part # list Click Here

JUNIOR 14-15

1. This class will follow all the rules for the stock-based snow cross class.
2. Restricted throttle kit not to allow more than 50% throttle opening must be installed designated throttle kit part numbers will be supplied by brand.

WOMENS PRO AM LITE

1. **This class will follow all rules for stock based snow cross class.**
2. **This will be a full throttle class.**
3. **This class will be monitored closely and may be discontinued at any time.**
4. **Age 14-17**

200 & 225 DIVISION

The intent of these classes is to establish races in which all can compete at their level of personal and equipment ability. The class structure is organized in such a way as to enable as many snowmobiles as possible a place to successfully compete.

If class rules are not followed, the class name shall not be used, and the class shall be run as a specialty class with ISR's prior approval.

Once rules are abridged, the sanction is no longer in effect.

All 200 DIVISION classes are stock based classes. No change or modification is allowed unless specifically allowed by these rules. If these rules do not specifically allow a change or modification, then it must be assumed that the change or modification is not allowed.

ELIGIBLE DRIVERS SNOWCROSS

See Matrix for specific ages for competition.

ELIGIBILE SNOWMOBILES

Arctic Cat ZR 200

Polaris

Ski-doo MXZ 200

Yamaha Sno-Scoot

200 CLASSES SNOWCROSS DIVISIONS

Stock

225 7-12

Improved Stock

AGE LIMITS

STOCK 6-12

Sno Cross 2026 - 2027

IMPROVED STOCK 7-16

STOCK CLASS

1. The snowmobile must have original OEM for the model engine, hood, track, frame, seat, cowl, gas tank, carburetion, air-box, suspension, and clutch supplied by the manufacturer for the model. Named components must be OEM for the model and year. Or properly filed OEM replacement parts that supersede the original OEM parts. Factory options are not allowed.
2. Engine RPM and vehicle speed may be monitored at the discretion of the Race Director.

ENGINE

1. Unless otherwise stipulated in this section, all governor linkage must be intact, in place and functional. Factory 6000 rpm rev limiter must be intact and functional.
2. No component of the engine (included head, valves, and cam) may be altered, changed, or enlarged from the engine manufacturer's original stock specifications nor may any additional components be added to the engine
3. Maximum cylinder bore for wear or cylinder repair cannot exceed .020 inches (.50MM
4. Stock OEM Pistons up .020 (.50MM) 0nly are allowed for replacement.
5. Blueprinting of engines is not allowed. No removal material whatsoever will be allowed. This is to include polishing, port matching, deburring, glass or sand blasting surfaces or material removal for engine balancing or other reasons.
6. No changes in engine dimensions can be made by gasket adjustments.
7. Spark plugs do not necessarily have to be OEM stock. Sparkplugs may not be machined to seat deeper in the head, plug gaskets may not be altered, and plug indexing is not allowed.
8. No carburetor/air silencer changes allowed. Filter material may be added or removed.
9. Jetting changes are allowed.
10. Remote adjustable main jet system allowed.
11. Exhaust must be OEM as produced for the model. The OEM exhaust system must be used in its entirety. No internal or external modifications allowed. No welding allowed, even for repair. Muffler components and/or silencing material must be intact always. Wrapping of the pipe is not allowed.

CLARIFICATION: THE FOLLOWING PHOTO SHOWS THE LEGAL HEADGASKETS AVAILABLE. DIMENSIONS AND THICKNESS ARE THE SAME, HOW EVER CONSTRUCTION METHODS VARY.

DRIVE

1. Brake must be always functional and operational.
2. Stock drive clutch engagement must be maintained. OEM drive clutch rollers and spring must be stock, with no modifications. Driven clutch spring and helix must be OEM. Stock drive clutch engagement must be maintained. OEM drive clutch rollers must be stock, with no modifications. Driven clutch spring and rollers must be OEM. Aftermarket primary rollers of exact same size and weight may be used. (23X18) 18 gm weight. Only exception would be the OEM hi Alt kit 14 GM wt. No Shimming of primary cover or spring allowed.
3. All guards and shields must be in place.
4. Final drive system must remain as produced. OEM 2.95:1 gear ratio must be maintained, no gear ratio changes allowed.

Sno Cross 2026-2027

SKI SUSPENSION & STEERING

1. Front suspension must be OEM for the model.

2. Front suspension must remain in its stock location.
3. Ski widening devices are not allowed in Stock classes unless furnished as OEM and properly filed.
4. Suspension travel may not be altered.
5. Handlebars must be intact at the start of each race day. Any commercially available handlebar allowed. May be altered to fit the driver. Open ends must be capped. Handlebars must be padded. Column or post must remain in its OEM position. Grips may be modified or replaced.

6. Handlebar (itself) may be removed and replaced. Method of affixing handlebar to the steering column must be approved by the technical inspector during safety inspection. ISR has no responsibility or gives no advisement in the method or materials selected to replace the handlebars in this class. Balance of steering column must remain in place and mounting locations must remain unchanged.

SKIS & SKI RUNNERS

1. The only skis that may be used will be Arctic Part #
and Yamaha part # 8ML-F3730-XX, Ski, and handle (Ski loop) Ski only part # 8ML-F3710-XX
2. Ski suspension components must be OEM.
3. All Ski loops must be at least 1 inch wide and 5/8-inch-thick or one-inch diameter round material. Foam may be added to achieve the 1-inch dimension. Refer to General Snowmobile rules sections for description and clarification.
4. Carbide wear bars may be added.

TRACK SUSPENSION

1. The complete suspension must be used as furnished and filed by the manufacturer. Shocks must be OEM for the model. OEM for the model suspension mounting points must be used.
2. OEM available marginal snow wheels may be added to the slide rails. (Rear axle idler wheels must remain OEM for the model.)
3. Suspension travel may not be altered.

TRACK & TRACTION

1. OEM track must be used as produced.
2. No carbon fiber backers or titanium traction products allowed.
3. Tunnel protectors may be added.
4. In oval applications slide lubers may be added.
5. Track clips may be added.

FRAME AND BODY

1. Running board reinforcement kit or complete running board kit is legal. Kit must be commercially available. No one off repairs allowed.

FOR LEMANS RACING ONLY

1. Specialized traction.

a. Maximum of two points per track segment.

a. ***No studs on outside belts.***

b. ***Studs must be unsharpened steel or insert carbide only.***

c. ***Screw traction components may be used in lieu studs.***

d. ***Refer to Snow Cross traction rules for placement and type of stud.***

IGNITION & ELECTRICAL

1. An ignition tether switch must be installed and functional.
2. Headlight and taillights must be OEM for the model.
3. OEM taillight must be operational /illuminated in its stock configuration.

Sno Cross 2026-2027

4. Ignition and lighting systems must be OEM for the model. No modifications allowed.

FRAME & BODY

1. OEM hood must be maintained without modification. Hood may be painted any color except in Oval and Sno-cross, where orange on the snowmobile is not allowed.
2. Windshield may be removed, modified, or replaced. Windshield must have safety trim.
3. All sharp edges must be padded.
4. Welding for repair will be allowed on the chassis. The repair must not alter the general design concept of the component or chassis.

200 IMPROVED STOCK

GENERAL

1. Snowmobile must conform to Stock class rules unless stated otherwise in this section.

ENGINE

1. OEM 6000 rpm rev limiter must be used. Rec Motors performance kit #
2. Performance Kit is the same for both Arctic and Yamaha models. All components supplied must be used. This includes the front suspension components supplied, must be used in the entirety of the kit.

SKIS AND SKI RUNNERS

1. Ski must be OEM for the model and year or a commercially available aftermarket ski with a minimum overall length of 20 inches.

SKI SUSPENSION & STEERING

1. OEM Front suspension shocks may be replaced with commercially available aftermarket.
2. Front suspension must remain in its stock location. (Front suspension widening achieved when using the approved performance kit is allowed.)
3. Commercially available ski widening devices will be allowed. (no one off setups allowed)
4. Handlebars must be intact at the start of each race day. Any commercially available handlebar allowed. May be altered to fit the driver. Open ends must be capped. Handlebars must be padded. Column or post must remain in its OEM position. Grips may be modified or replaced.
5. Handlebar (itself) may be removed and replaced. Method of affixing handlebar to the steering column must be approved by the technical inspector during safety inspection. ISR has no responsibility or gives no advisement in the method or materials selected to replace the handlebars in this class. Balance of steering column must remain in place and mounting locations must remain unchanged.

TRACK SUSPENSION

1. The complete suspension must be used as furnished and filed by the manufacturer. OEM suspension shocks may be replaced with commercially available aftermarket. Spring spacers may be used to suspension mounting points must be used.
2. Seals may be removed from bearings in bogie wheels, rear idler wheels and/or rear idler sprockets.
3. Commercially available marginal snow wheels may be added to the slide rails. (Rear axle idler wheels must remain OEM for the model.)

DRIVE

1. Gear ratio may be changed, by using any commercially available chain sprocket kit or commercially available OEM belt style pulleys.

Sno Cross 2026 -2027

2. OEM primary and secondary clutch and belt must be used. Primary rollers and spring along with secondary spring may be changed using commercially available parts only. Secondary helix must remain stock from OEM with no modifications.
3. Chain case/ gear/ pulley case must use a protective cover to keep drivers' extremities from contacting drive system.

225 Tillotson

The 225 Tillotson is the only class running these rules.

Snowmobile must conform to all 200 Stock Class rules unless stated otherwise in this section.

ENGINE

1. TPP225RS-02 Tillotson sealed engine with installed snow conversion package.
   Part #T225RS-2-RK
2. Recoil rope must exit OEM location.

DRIVE

1. OEM primary and secondary roller and spring changes are **NOT ALLOWED**.
   14 gram primary rollers are **NOT ALLOWED**.
2. Drive gears may be changed from stock 2.95 ratio to aftermarket 2.38 gears.
   Part #200SGK

SKI SUSPENSION & STEERING

1. Handlebar and riser may be changed but must be commercially available.
   A bar pad must be used.
2. Skis may be changed.
3. **NO AFTERMARKET FRONT SHOCKS ALLOWED**
4. No ski widening devices allowed.

TRACK SUSPENSION

1. OEM rear shock must be used.
   NO AFTERMARKET SHOCKS ALLOWED
2. Dual front limiter straps may be used.

IGNITION & ELECTRICAL

1. OEM wiring harness may be removed.
   Tether switch and kill switch must remain functional.
2. Optional rechargeable battery may be used to power brake light and OEM handlebar warmers.
   Battery must be securely fastened to belly pan.

FRAME & BODY

1. Bulkhead and tunnel reinforcement allowed.

Sno Cross 2026 - 2027

DITCHBANGER OPEN

Must be 18+ years of age or 16+ if advanced by ISR.

DITCHBANGER OPEN MOD MACHINE REQUIREMENTS:

1. **ANY CONSUMER TRAIL SLED 1995-2005**
   NO factory race sleds
2. **Safety Switch**
   A functional and operational secondary safety shut off (kill switch) that will terminate ignition is mandatory for all classes.
3. **Tether Switch**
   In the event that a rider becomes dislodged from his/her machine or crashes, and the engine continues to run, and the tether switch fails to function or is not properly attached to the rider while the engine is running, the rider will be DQ'd from the heat in which the infraction occurred. It is the rider's responsibility to make sure that the tether is attached and functioning properly. A working tether must be attached to a person or racer and operational at all times that the sled is running.
4. **Tail light**
   Every sled must start the race with a working tail light. It may be a battery powered light

they flash or is constantly on. No wet cell batteries (lead acid)

5. **Numbers**
   Every sled needs Large (black and white) numbers that are visible from both sides. Numbers must be at least 8" tall with at least a 1" boarder around all sides. Recommended areas are on the side of the hood/belly pan or on the sides of the windshield. If they can't be read, you won't be scored.
6. **Traction**
7. STUDS ARE **NOT** PERMITTED.
   Frame and Body
   A rear snow flap is required. It must be at least as low as the center of the rear boggy wheels in the skid.
   Gussets/plating/strengthening is allowed anywhere on the sled. Components may be lightened except safety items like clutch cover, brake shrouds/guards, and areas that can trap rider in rotating assemblies.
8. **Exhaust**
   Exhaust must be full covered by hood/belly pan. It cannot protrude outside the body except for the very end of the resonator/muffler. Exhaust must exit from the bottom.
9. **Clutches**
   Clutches must have a secured and solid cover that protects the rider from the clutches.
10. **Hoods**
    All sleds must have a secured hood
11. **Steering**
    Steering must remain stock. This includes the steering post. Steering post cannot be mounted in a modified location

Sno Cross 2026-2027

12. **Seat**
    Any seat is allowed. Seat must be securely fastened
13. **Brakes**
    Any brakes are allowed. Brakes must be **functional at all times**. Brake lever must remain on the left, front side of the handle bar.
14. **Engine**
    Cylinder, head/domes/gasket, case, air box, intake, ignition, exhaust and carburetors may be modified/changed. Must not exceed 600cc
15. **Chassis/Frame/Body**
    Shock mounts, suspension pivots, shocks, steering geometry, skid frame, trailing arms/ a-arms, skis, steering post location, handlebars/controls, seat may be modified/ changed
16. **Drivetrain**
    Track, clutches, brakes may modified/changed
17. **Fuel**
18. **Must use commercially available pump fuel with no additives. OR Sunoco Surge 105**

705 985 6715 | joe@snowcross.com | www.snowcross.com

FOUR STROKE 120 CLASSES

The intent of these classes is to establish races in which all can compete at their level of personal and equipment ability. The class structure is organized in such a way as to enable as many snowmobiles as possible a place to successfully compete.

If class rules are not followed, the class name shall not be used, and the class shall be run as a specialty class with ISR's prior approval.

Once rules are abridged, the sanction is no longer in effect.

All 120/4 Stroke classes are stock based classes. No change or modification is allowed unless specifically allowed by these rules. If these rules do not specifically allow a change or modification, then it must be assumed that the change or modification is not allowed.

ELIGIBLE DRIVERS

Stock 120: These are classes for 4-12-year-old drivers.

Champ 120: These are classes for drivers aged 6-12. All other technical rules apply.

At times, regional or national rules may apply, but in any case, competitors will not be younger than 4 years of age.

ELIGIBILE SNOWMOBILES

Arctic Cat Z 120, Z 120 Sno Pro

Bombardier Mini Z 120

Polaris XCR 120

Yamaha SRX 120

Sno Cross 2026-2027

SNOW CROSS DIVISIONS

Speed Limited Snow Cross

Snow Cross Stock

Improved

Champ 120

REGIONAL SPECIALTY CLASSES

Open 206

1. The 206 Local Option OPEN 206 class combines the rules for Champ.
2. Chassis and Drive with a spec engine rule. All chassis rules are the same as Champ 120.

Specialty Classes

1. Can be any 120/4 racing event that does not fall under any of the specific circuits or classes but meets established ISR safety standards and qualifies for ISR insurance coverage.
2. All specialty classes must be approved by ISR and the Race Rules Committee.

GENERAL COMPETITION AND SAFETY

1. If a driver is off his/her sled after an accident involving two or more sleds, the race will be red flagged.
2. Driver entry into an event is open to any qualified individual. The sanctioning body has the authority to evaluate all drivers to determine their qualifications.
3. A driver must compete for a full year in Stock 120/4 Class or in Kitty Cat racing and be six years of age before competing in any of the other 120/4 classes.
4. In Champ classes, drivers must have at least one-year experience in 120/4 classes and be at least 7 years old through 14 years old. Drivers who attain the age of 15 during the scheduled season may complete the season.
5. Drivers must not reach the age of 15 prior to published scheduled race season for the affiliate.
6. Both the owner and driver are responsible to ensure that their snowmobile and driver safety equipment conform to all the rules for the class in which they have entered. The applicable rules are published in the chapter, in the GENERAL RULES AND REGULATINS section and from time to time, in ISR bulletins. Any driver that does not meet the requirements listed will be subject to disqualification and forfeiture of any prizes or awards, plus eligibility for the next two (2) races.
7. Two (2) laps are recommended in heats and five (5) laps in the final heats. Regional variations to lap counts allowed.
8. For restarts, the Snowmobiles will be arranged in a staggered line at a 45° angle to the track starting from left and going to the right.
9. Mandatory tech inspection of first place sleds.
10. The Race Director and/or Tech Director have the authority to determine structural integrity.
11. While driver is on course no radio communication between driver and crew is allowed.

MANDATORY DRIVER SAFETY EQUIPMENT

1. Helmets, upper body protection, shin guards, and above the ankle boots are required in all classes.
2. Mouth guards are mandatory in Sno-Cross and any other race over uneven terrain. Mouth guards must remain in place for the duration of the race.
3. See GENERAL RULES AND REGULATIONS, DRIVER SAFETY EQUIPMENT for details.

ENTRY FEES, PRIZES AND AWARDS

1. Recommended entry fees in 120/4 Racing - $15.00 in all classes.
2. Recommended awards – Trophies only (no prize money.

GENERAL SNOWMOBILE RULES

1. (All classes in Sno-cross) No traction products allowed.
2. Guide clips and/or track clips may be added to the track.
3. Carbide ski runners allowed.
4. Left side of handlebar may be straightened. Structural integrity must be maintained.
5. An extension may be added to the left handlebar (see illustration.) Maximum 3 inches wider, maximum 4 inches down. End must be capped.

Sno Cross 2026 - 2027

6. Any separate front bumpers that extend away from the body must be padded.
7. Slide rail lubrication systems may be allowed, depending upon local, state, and/or federal laws and must utilize non=toxic and biodegradable lubricants.
8. Use of Heli-Coils are allowed in OEM location only.
9. In Stock and Improved Stock, snowmobile performance will be monitored and IKCR Rules Committee may adopt rules changes to insure fair competition among the various models.
10. All metal ski hoops must be padded.
11. On board slide rail lubrication systems allowed in all classes, depending upon local, state, and/or federal laws, lubrication must be non-toxic and biodegradable. Pulse line may be added to engine for slide lube pump purposes.
12. A tachometer may be installed.
13. Data acquisition and data acquisition systems allowed.
14. Taillight required.

STOCK CLASS RULES

GENERAL

1. The snowmobile must have original OEM for the model engine, hood, track, frame, seat, cowl, gas tank, carburetion, air-box, suspension, and clutch supplied by the manufacturer for the model. Named components must be OEM for the model and year. Or properly filed OEM replacement parts that supersede the original OEM parts. Factory options are not allowed.
2. Engine RPM and vehicle speed may be monitored at the discretion of the Race Director.

ENGINE

1. Unless otherwise stipulated in this section, all governor linkage must be intact, in place and functional. Any governor spring may be used. Governor gear may be removed.
2. Replacing chain tensioner with commercially available aftermarket tensioner is allowed.
3. No component of the engine (included head, valves, and cam) may be altered, changed, or enlarged from the engine manufacturer's original stock specifications nor may any additional components be added to the engine.
4. Maximum cylinder bore for wear or cylinder repair cannot exceed .020 inches (.50MM)
5. Stock OEM Pistons up .020 (.50MM) 0nly are allowed for replacement.
6. Blueprinting of engines is not allowed. No removal material whatsoever will be allowed. This is to include polishing, port matching, deburring, glass or sand blasting surfaces or material removal for engine balancing or other reasons.
7. No changes in engine dimensions can be made by gasket adjustments.
8. Spark plugs do not necessarily have to be OEM stock. Sparkplugs may not be machined to seat deeper in the head, plug gaskets may not be altered, and plug indexing is not allowed.
9. No carburetor/air silencer changes allowed. Filter material may be added or removed.
10. Jetting changes are allowed.
11. Remote adjustable main jet system allowed.
12. Exhaust must be OEM as produced for the model. The OEM exhaust system must be used in its entirety. No internal or external modifications allowed. No welding allowed, even for repair. Muffler components and/or silencing material must be always intact.
13. To equalize performance between the manufacturer's' models the following changes are allowed.
    a. Ski-Doo racers can change valve springs to Honda P/N 14751-ZE1-000 Ski Doo racers can use Polaris valve springs meeting ISR Valve Spring Criteria.
    b. Arctic Cat 120 racers can upgrade to the 120 SnoPro kit consisting of valve springs and cam. (Spring number 129-21-90700). The kit must be used in its entirety.

    c. 2010 to current Arctic cat with Yamaha engines and Yamaha SRX 120 models can upgrade to the Yamaha/Arctic Cat performance kit consisting of camshaft, and valve springs, in conjunction with ISR Bulletin 12/13-009.

Valve Spring Criteria

A.

		Valve Spring Dimensions	
	Wire Dia.		Ski Doo

B.

	Seated hgt	Open hgt	Seated press.	Open press.
0.875	0.613	20 lb.	25 lb.	

Sno Cross 2026-2027

Ski Doo	*.078+-.002*		Arctic Cat	0.955	0.735	26 lb.	35 lb.
A C 2009<	*.090+-.002*		AC 2009<	0.574	0.574	20 lb.	24 lb.
AC/2010	*.078+-.002*		AC 2010	0.678	0.678	15 lb.	21 lb.
Polaris	*.090+-.002*		Polaris	0.850	0.625	27 lb.	38 lb.

Accuracy of this test will be based on the tester used and the measuring tool used for checking heights.

14. Polaris part # 0681-545 valve guide may be used on Arctic Cat 120 models. Valve guide may be shortened to the valve guide specifications for the Suzuki engine only.

SPECIAL NOTICE

ENGINE REV LIMITERS will be imposed on all Stock and IMPROVED STOCK 120 class snowmobiles for the 2019-2020 season to equalize performance levels between all brands.

To enhance the durability of the Honda GX120 engine used in production Ski Doo Mini 120 and Mini-Rev Snowmobile, a valve "rotator" Ski Doo part number H14781-ZE1-000 may be fitted on the intake valve.

DRIVE

1. Brake must be always functional and operational.
2. Clutch may be replaced with aftermarket clutch of the same basic centrifugal design. Disc style drive clutches are not legal because they are not the same centrifugal design. (No variable ratio systems allowed.)
3. Stock drive clutch engagement must be maintained. Brake band may be changed to fit clutch.
4. No belt drives allowed.
5. Chain guard must be in place.
6. Sprocket ratio changes may be required by circuits to equalize performance between the various models.
7. 120 Sno X class Polaris gearing 420 ratio which is Stock for the sled. All Cat, Yam and Ski doo allowed to run 410 gear ratios. This can be achieved with #35 chain or #40/420 chain, tooth count on sprockets must equal ratio required.
8. Chain tensioner may be replaced with commercially available aftermarket tensioner.
9. Number 40/420 Drive chains allowed.

ISR Stock Class Gearing Info for #35 chain and Sprockets

4.10 ratio for Arctic Cat, Yamaha, and Skidoo 120 and 4.20 ratio on Polaris 120 cannot be achieved with #35 chain sprocket combinations.

Listed are the only legal #35 chain sprockets combinations. (All Brands in competition)

4.10 ratio will be 12- 50, 13-54, 14-58

4.20 ratio will be 12-51, 13-55

Or go to OEM chain.

SKI SUSPENSION & STEERING

1. Front suspension must be OEM for the model.
2. Front suspension must remain in its stock location.
3. Ski widening devices are not allowed in Stock classes unless furnished as OEM and properly filed.
4. Suspension travel may be limited by means of tie down only. Suspension travel must be maintained. No rigid suspensions allowed.
5. Ski-Doo Mini z can modify the rubber front suspension pucks.
6. Handlebars must be intact at the start of each race day. Any commercially available handlebar allowed. May be altered to fit the driver. Open ends must be capped. Handlebars must be padded. Column or post must remain in its OEM position. Grips may be modified or replaced.

Sno Cross 2026-2027

SKIS & SKI RUNNERS

1. Ski must be OEM for the model and year or a commercially available aftermarket ski with a minimum overall length of 20 inches.
2. Ski suspension components must be OEM.
3. Ski loops must be added. Minimum 1-inch wide, minimum 5/16-inch-thick material must be used. Loop must have minimum diameter of 3 inches. (Nonmetallic loops only) Non-Metallic is defined as: UHMW, Nylon, Acetal/Delrin type polymer materials only. If metallic loops are used refer to General Snowmobile rules sections for description and clarification

TRACK SUSPENSION

1. The complete suspension must be used as furnished and filed by the manufacturer. No options allowed. Shocks must be OEM for the model. OEM for the model suspension mounting points must be used.
2. Seals may be removed from bearings in bogie wheels, rear idler wheels and/or rear idler sprockets.
3. Commercially available marginal snow wheels may be added to the slide rails. (Rear axle idler wheels must remain OEM for the model.)
4. Suspension travel may be limited by means of limit straps only. Suspension travel must be maintained.
   No rigid suspensions allowed.
5. Sno-cross and other rough terrain races – Stock 120/4 stroke rules apply with the exception that commercially available OEM or aftermarket shocks and springs allowed.
6. If the unit did not come with a rear shock, you are allowed a shock upgrade kit for the rear suspension.

TRACK & TRACTION

1. Any commercially available molded rubber track may be used.
   Track must fit within frame and suspension without modification to frame, or suspension. Track drivers matching the pitch of the track may be used. Track must be used as produced by the molder. Any hyfax allowed.
2. The OEM fixed upper carrier idlers may be reduced in dimension by 3/8 (.375) from the original for the model filed spec.
3. Track clips (guide clips) may added.

LEMANS RACING ONLY:

1. Specialized traction.
   e. Maximum of two points per track segment.
   f. No studs on outside belts.
   g. Studs must be unsharpened insert carbine only.
   h. Refer to Snow Cross traction rules for placement and type of stud.

IGNITION & ELECTRICAL

1. An ignition tether switch must be installed and functional.
2. Headlight must be OEM for the model.
3. Taillight must always be operational/illuminated .
4. Taillight used must be as bright or brighter than OEM. This visual check shall be taken at engine idle.
5. Ignition and generating systems must be OEM for the model. No modifications allowed.

FRAME & BODY

1. OEM hood must be maintained without modification. Hood may be painted any color except in Oval and Sno-cross, where orange on the snowmobile is not allowed.
2. Windshield may be removed, modified, or replaced. Windshield must have safety trim.
3. All sharp edges must be padded.
4. Welding for repair will be allowed on the chassis. The repair must not alter the general design concept of the component or chassis.

Sno Cross 2026-2027

IMPROVED STOCK RULES

GENERAL

1. Snowmobile must conform to Stock class rules unless stated otherwise in this section.

DRIVE

1. Gear ratio may be changed.
2. #35 chain may be used Listed. (All Brands in competition)
3. Clutch may be replaced with aftermarket clutch of the same basic centrifugal design. Disc style drive clutches are not legal because they are not the same centrifugal design.
4. (No variable ratio systems allowed.) Brake band may be changed to fit clutch.

CHAMP CLASS

GENERAL

1. Modifications allowed in other 120/4-stroke classes are allowed in Champ.

ENGINE

1. Any OEM 120 engine allowed. Modification and/or replacement of parts is limited to items listed in this section.
2. Engine components allowed for modification or change from OEM.
   a. Cam shaft – maximum .290 Inch Valve lift
   b. Valves and seats, and guides.

- Maximum intake valve diameter 25.2mm
- Maximum exhaust valve diameter 24.2mm
- Minim valve stem diameter 5.5mm (+- .15mm)

   c. Valve springs and retainers
   d. Tappets and push rods
   e. Governors may be removed.
   f. Connecting rod.
   g. Carburetor insulator block may be modified but must maintain stock thickness dimension.
   h. Rocker Arm Pivot Studs and pivots.

Engine overbore may not exceed .020”(0.50mm) of standard bore size for the model.

3. Engine stroke must be stock as manufacturers filed specifications.
4. Engine components allowed to be modified but must begin as OEM for engine model.
   a. Bearings
   b. Crankshaft
   c. Piston and rings
   d. Gaskets
   e. Cylinder head and intake manifold
   f. Cylinder
   g. Crankcase
   h. Rocker arms
   i. Intake Manifold
   j. Fan Shroud
   k. Carburetor insulator block may be modified but must maintain stock thickness dimension.
   l. Rocker Arm Stud
5. Carburetor may be bored and modified, bust must begin as OEM supplied for the engine’s model. A velocity Stack may be added to the intake side of carburetor.
6. A snowmobile type diaphragm fuel pump may be added. A pulse fitting may be added to the intake tract to be used to operate the diaphragm fuel pump.

Sno Cross 2026 -2027

7. The exhaust system may be modified or replaced. The exhaust system must be functionally silenced. The following minimum standards for straight-thru silencers are required:
   a. Inner pipe must have at least 15 holes per square inch. Minimum hole size 1/6 in. (Minim 3/8 in. sound absorbing material around the entire circumference of inner pipe).
   b. Inner pipe (perforated core) must contact sound absorbing material (fiber or steel wool packing).
   c. Outer pipe must be at least ¾ inch larger than inner pipe.
   d. Minimum silencer length 3 inches.
8. Outlet pipe must point downward and cannot protrude beyond machine width.
9. Removal of recoil mechanism and starter cup to use 12-volt remote electric starter is allowed. The recoil cover must be maintained. A 1.5-inch hole may be drilled in recoil cover to insert starter drive.
10. Valve cover may be modified to stabilize rocker arm stud. Stud girdles may be added. Breather fitting may also be added.

DRIVE

1. Clutching in open. CVT type transmission allowed. Drive components must be commercially available.
2. A metal clutch/chain cover must be always in place during operation. It must cover clutches, gears, belts, chains, starter cups, and any other rotating components.
3. Brakes must be always properly operable.
4. Track drive sprockets may be modified or changed.
5. Jackshaft allowed.

SKI SUSPENSION AND STEERING

1. Ski suspension and steering may be changed or modified. Materials and components must meet or exceed OEM strength and structural integrity. Must maintain suspension travel with driver seated. No rigid suspensions.
2. The structural integrity of the steering and suspension systems must be maintained.
3. Maximum ski stance is 34 inches (measured between ski runner cutting edges)

SKI AND SKI RUNNER

1. Skis may be changed to commercially available aftermarket skis.
   a. Minimum length for Sno-cross is 20 inches.
2. Ski loop must conform to GENERAL RULES AND REGULATIONS.
3. Ski runners must meet competition and safety requirements for the type of racing (i.e., Oval or Sno-cross).

TRACK SUSPENSION

1. Track suspension may be altered, relocated, or replaced. Structural integrity must be maintained.
2. Suspension must maintain a minimum of 2 inches of useable, vertical travel with the driver seated.
3. Track and track suspension must fit and be mounted within the confines of the tunnel.
4. Slide rail lubrication systems may be allowed, depending upon local, state, and/or federal laws and must utilize non=toxic and biodegradable lubricants.

TRACK AND TRACTION

1. Track must conform to Stock class rules.
2. Track may not be reversed.
3. Traction control devices must conform to rules in Stock class.

FRAME AND BODY

1. Snowmobile length must not exceed OEM for the model length by more than 2 inches (ski loop to rear of tunnel).
2. Overall body width must be within 2 inches of OEM for the model body width.
3. Bumpers must be padded (no sharp edges exposed).
4. Snow flap must be touching ice with driver aboard.

Sno Cross 2026 - 2027

5. Belly pan and hood may be replaced. Belly pan and hood are required components.
6. Bulkhead may be modified or replaced: it must remain within 1 inch of the length and 1 inch of the width of the OEM bulkhead.
7. Tunnel may be modified or replaced using aluminum material.
8. only. Material must be a minimum of .062" thick.

IGNITION & ELECTRICAL

1. Ignition coil must be OEM for model. Flywheel must be replaced with an aftermarket billet aluminum flywheel designed for the application. Lighting coil may be removed.
2. Taillight must be always illuminated while on the racing surface, whether the engine is running or not.

SEMI PRO 206

GENERAL

1. The 206 Local Option Semi Pro class combines the rules for Stock Chassis and Drive with a spec engine rule. All chassis rules are the same as 120 STOCK CLASS.
2. Snowmobile must be an ISR designated 120/4-stroke model that complies with the GENERAL RULES AND REULATIONS section.
3. Unless otherwise specified, 120/4 Stroke Stock rules apply.
4. Externally adjustable main jet allowed.
5. Final drive track drivers can be replaced. OEM number of teeth must be maintained.
6. Sno-cross and other rough terrain races – Stock 120/4 stroke rules apply with the exception that commercially available running boards may be ran.

AGE LIMITS

1. Competitors must be 6 years of age.

ENGINE

Refer to LO 206 ENGINE SECTION

DRIVE

1. Stock 120/4 stroke rules apply.
2. 10/32 gear sets will be allowed.
3. Final drive shaft may be changed but must be same material type (steel to steel) and bearing dimension as OEM.

SKI SUSPENSION AND STEERING

1. Sno-cross and other rough terrain races – Stock 120/4 stroke rules apply with the exception that commercially available OEM or aftermarket shocks and springs allowed.
2. If the unit did not come with a rear shock, you are allowed a shock upgrade kit for the rear suspension.

PRO 206

GENERAL

1. The 206 Local Option Pro class combines the rules for 120 racing with a spec engine rule. All chassis rules are the same as 120 STOCK CLASS.
2. Snowmobile must be an ISR designated 120/4-stroke model that complies with the GENERAL RULES AND REGULATIONS section.
3. Unless otherwise specified, 120/4 Stroke Stock rules apply.
4. Externally adjustable main jets allowed.
5. Final drive track drivers can be replaced. OEM number of teeth and diameter must be maintained.
6. Sno-cross and other rough terrain races – Stock 120/4 stroke rules apply with the exception that commercially available running boards may be ran.

AGE LIMITS

1. Competitors must be 7 years of age. Drivers reaching 14 years of age during the season may finish the season in that class.

ENGINE

Refer to LO 206 ENGINE SECTION

Sno Cross 2026-2027

DRIVE

2. Gear ratio may be changed.
3. #35 chain may be used.
4. Clutch may be replaced with aftermarket clutch of the same basic centrifugal design. Disc style drive clutches are not legal because they are not the same centrifugal design.
5. (No variable ratio systems allowed.) Brake band may be changed to fit clutch.

SKI SUSPENSION AND STEERING

1. Sno-cross and other rough terrain races – Stock 120/4 stroke rules apply with the exception that commercially available OEM or aftermarket shocks and springs allowed.

2. If the unit did not come with a rear shock, you are allowed a shock upgrade kit for the rear suspension.

SPEED LIMITED CLASSES

GENERAL

1. This is an alternative means of conducting 120/4 stroke races that required that all competitors govern the speed of their snowmobiles according to the class rules.
2. A test course should be provided which will allow competitors to check the maximum speed of their sled before the event. (It is recommended that the speed be displayed on a large visual display.)
3. A radar gun or other device will be used at the fastest portion of the track during the races. (It is recommended that the speed be displayed on a large visual display.)
4. Recommended classes:
   Class One - 15 mph, Drivers aged 4 through 5. Class Two - 18 mph, Drivers aged 6 through 12.
5. There must be no class speed more than 18 mph.
6. To ensure safe competition, the Race Director must evaluate the course and the class speed limits and make changes, as necessary.
7. Violators of the class speed limit will be reclassified to last place finishing position.
8. Driver safety equipment, sled equipment and course requirements from the 120/4 STROKE RACING section apply.
9. A snowmobile and driver safety inspection will be conducted before racing. Post-race technical inspection will be conducted in the event of a protest only.

SNOWMOBILE REQUIREMENTS

1. Snowmobiles must conform to the rules of the Improved Stock Class for 120/4 Stroke Racing

COURSE REQUIREMENTS

SNO-CROSS

1. Refer to Sno-Cross track layout in the Appendix.
2. Course width and length may be adjusted to suit the size and performance of the 120/4 sleds.
3. Course safety must not be compromised.
4. The track must have a 25-foot (minimum) spectator safety buffer zone and barrier.

Sno Cross 2026-2027