INTERNATIONAL SNOWMOBILE RACING

1527 North Railroad Street Eagle River,WI 54521 262-335-2401

Cross Country 2026-2027

Cross Country 2026 - 2027

VERIFICATION AND CONTROL

These GENERAL RULES apply to all types of ISR racing sanctions and all classes unless so noted. All participants, racers and crewmembers are required to be fully aware of these regulations and must abide by them.

The rules for competition are intended only as a guide for the conduct of the sport in a uniform manner from region to region.

Safety rules and guidelines contained herein are of utmost importance. All participants must be concerned with safety and be familiar with these rules and guidelines. However, ISR does not warrant, guarantee, or ensure safety even if the rules are enforced and/or adhered to. Moreover, each participant in competition has the responsibility to assess the safety aspects of the facilities and conditions and must assume the risk of competition.

MANDATORY EMERGENCY VEHICLE

1. A properly licensed and equipped emergency vehicle (i.e., rescue vehicle or ambulance) must be at the race site to transport injured persons to an appropriate hospital. This vehicle shall have all emergency equipment. Contract arrangements must be made to have a transport situation ambulance on site if a transport is made. Many tracks are now using a track owned ambulance for on-site work. Many times, these vehicles are not certified for transport of patients on the highway. Arrangements must be made for a certified transport ambulance to make the actual patient transport. Racing must not be allowed without an ambulance on the grounds.

2. If an event is located at a ski hill facility and it has qualified ski patrol personnel (Paramedics - ALS) and an onsite room fully equipped as an ambulance would be it can be substituted for the actual vehicle. When The terrain and driving distance by ambulance makes it advantages to use a prearranged air ambulance this method can be used to transport injured persons to an appropriate hospital after stabilization by Ski Patrol personnel. (Paramedics - ALS) CLARIFICATION: This applies to events with extended travel distances for transport, or possible difficult travel by ambulance. The facility must be manned during racing hours, with ALS -Paramedic grade personnel. Trained staff and appropriate transport equipment must be at the ready to transport victims from the racecourse, hill, mountain, or natural ice racetrack.

RULE SUPPLEMENTS

1. Rule supplements, additions or corrections shall be announced on the official website. Upon such an announcement the rule changes become effective and enforceable.
2. Telephonic race rules conference calls will be followed up with an information letter to the affected affiliates.
3. After a rules meeting, any request to reconsider a new rule requires a majority vote of the rules committee to approve a revote. Then, a ¾ majority is also required to change the rule.

CLASS DIVISIONS

1. All class entries will not discriminate based on sex. Any qualified member may participate in the approved classes offered in any sanctioned event.
2. A snowmobile will be allowed to race in its respective displacement, or designated performance class, and any larger displacement or performance class, except as noted in specific sections.

JUNIOR CLASS RACING

NOTICE

Parents or guardians who knowingly enter a Transition class, Junior Class, with a driver who is not of the legal age to compete in the specific class, will be subject to a $500.00 fine and one year suspension. The driver also may be given a one-year suspension.

Affiliates who through negligence or not having an approved advancement system allow drivers under the age of 18 years of age to enter adult classes without being certified through the advancement process may be fined $500 and possible loss of affiliation rights.

Advancement Procedure.

1. No minors may enter adult classes until the age of 18, or if approved by the Advancement Procedure which is available starting at 14 years of age. You must be 16 years of to compete in a Pro class.
2. Each involved affiliate of the same discipline (example Oval Sprint) must either provide a qualification process, or declare to ISR they will observe other affiliates of the same discipline's advanced rider list. Affiliates with a qualified advancement program have the right to determine advancement of candidates as they see fit. Qualifying with one affiliate does not qualify the youth driver for all affiliates.
3. Affiliates may honor another affiliates advancement. Driver must present copies of the advancement prior to registration.

AFFILIATE RESPONSIBILITIES

1. Before an affiliated sanctioning body may advance Junior drivers, it must have a bona fide junior program. The affiliate's Junior Competition committee /Representative is responsible for verifying a Junior's driving ability.
2. Junior competitors shall be required to perform practice laps/runs from time to time to allow race officials to observe their progress in learning the handling skills required to advance.
3. Junior advancement is at the discretion of the driver's classification committee and can be reviewed at any time. The committee has the authority to advance, demote or deny advancement to any driver. The decisions of the classification committee are final.
4. The affiliate board/driver classification committee will not advance drivers until all DRIVER/PARENTAL RESPONSIBILITIES have been fulfilled and all completed and signed documents are on file.

DRIVER / PARENTAL RESPONSIBILITIES

WHEN AN ISR COMPETITOR REACHES THE AGE OF 14 YEARS AND QUALIFIES FOR JUNIOR COMPETITION, HE/SHE MAY BE ADVANCED UP TO THE NEXT LEVEL, BUT ONLY AFTER FULLFILLING ALL REQUIREMENTS BELOW:
(SEE ADVANCEMENT FLOW CHART FOR SPECIFIC CLASSES IN JUNIOR COMPETITION SECTION).

1. A Junior competitor must compete in at least one entire event in a given class before becoming eligible for advancement.
2. Before a Junior may advance to a senior class, he/she must meet the Junior advancement requirements established by the affiliate's board/driver advancement committee.
3. He/she must petition the affiliate's board, in writing, requesting that he/she be allowed to advance.
4. The request for advancement must be accompanied by all new consent and release forms (as specified above).
5. The request must be approved in writing by the affiliate board to advance.
6. Before advancing to a Pro Division class, the Junior must be at least 16 years of age.
7. Parents may request for their child to stay in a lower class if they feel the driver needs more experience to develop track and driving skills. For Advancement application Click here.

REGISTRATION AND ENTRY

1. WAIVER FORMS ARE MANDATORY FOR ALL PERSONNEL IN SECURED AREAS (paddock, staging and track).
2. Driver must have registered at race headquarters and signed a waiver before any runs are made (practice or racing). No one, except officially entered drivers may ride or practice on any racecourse on the day of the event.
3. No refunds of entry or other fees will be made at sanctioned events after registration is closed, unless the event is cancelled or rescheduled by a ruling of the Race Director, after which time fees will be returned or advanced to the next event in the series.
4. Any competitor who pays for race entry or organization membership with a check or credit card is responsible for the payment of all charges should the bank or other institution fail to remit for whatever reason.
5. Drivers who fail to complete payment for entry fees are subject to discipline prescribed by the ISR affiliate. Drivers may be suspended for a period of one year from the date on which the debt is paid.
   a. If the participant stops payment on check or credit card, participant gives up the right to protest or appeal until full payment is made.
   b. Participants who pass NSF checks must pay entry and prescribed fees in full before the next race or within 30 days, whichever is sooner.
6. Insurance fees are not refundable.
7. Regional service charges or insurance surcharges are not considered part of entry fee maximums.
8. Gate admission fees for driver and crewmembers will be regulated on a regional basis.
9. The order of events will be regulated on a regional basis.
10. The maximum number of classes a driver can enter per day will be regulated on a regional basis.
11. Any class or event can be eliminated when there are less than two (3) official entries at the close of registration.
12. All participants in events must be fully familiar with the rules and regulations, plus such rules by Race Promoters that may be specifically applied to any event.

Cross Country 2026 - 2027

DRIVER AND SNOWMOBILE

1. A driver and his snowmobile (chassis and engine) shall be considered a unit and once the class has begun, neither will be substituted. If a driver qualified on a snowmobile, both must be in the same final event of the class and/or event.
2. Engine parts may be replaced during the event, except for the crankcase and crankshaft, which may not be replaced.

SPONSOR IDENTIFICATION

1. Anytime the sanctioning organization or sanctioned event has a sponsorship, all members and promoters must meet sponsorship requirements, if drivers' number system is not compromised.
2. Recommended size for any sponsor's required emblem should not exceed sixteen (16) square inches on the front and twenty-four (24) square inches on the back of the driver's uniform.

DRIVER IDENTIFICATION

1. There will be an automatic suspension for drivers who race under another driver's number.
2. All drivers will wear their issued bib or a facsimile thereof. Drivers will be required to keep the snowmobile numbers and drivers' body back numbers in a legible condition. Drivers must either wear a bib with their name and number for the event or their number built into the upper body outer garment worn during competition. Numbers are to be 8 inches high with a one- inch width. Name letters are to be 2 inches high with a 3/8" width.

SNOWMOBILE IDENTIFICATION

1. The driver's assigned competitive number must be displayed on both sides of snowmobile hood. The number must be a minimum of six (6) inches high, 3/4 inches wide and be displayed in contrasting colors.
2. These numbers must be displayed on the snowmobile in a permanent manner before being allowed to race (see illustration).

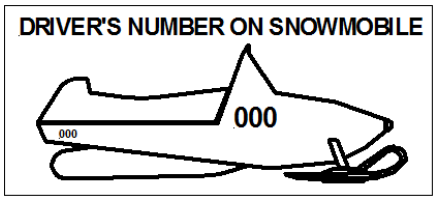

PRE-RACE SAFETY INSPECTION

1. ANY ENTRY IS SUBJECT TO INSPECTION AT ANY TIME UPON REQUEST BY THE RACE DIRECTOR OR TECHNICAL DIRECTOR.
2. Pre-race safety inspections are mandatory at all races. Passing a pre-race safety inspection is no guarantee that a snowmobile complies with all rules for the event. Affiliates may allow prerace safety inspections to be conducted at the first race of a series and allow the sled to compete in subsequent events in the series without reinspection if on track records indicate no evidence of crashes during competition.
3. Only snowmobiles having passed pre-race inspection will be allowed on the racetrack.
4. All aspects of modification are contingent on safety inspection by the Technical Director. The Technical Director may remove any snowmobile from competition that does not meet safety requirements.
5. Damaged or broken safety equipment (not including tether switch) not detected during a race is not grounds for disqualification after completion of that race unless black-flagged during the race in question.

MANDATORY TEARDOWN

1. Regardless of snowmobile equipment passing prior inspections, compliance with the rules must be made at the post-race inspection.
2. Once a snowmobile has completed registration to race it may be inspected at any time.
3. Tech Director will select the snowmobiles for mandatory teardown and inspection. Drivers will take their snowmobiles directly to Tech after completing the race. The snowmobile must remain in Tech until released by the Tech Director or a designated member of the Tech staff.
4. Driver and/or driver's mechanic will perform teardown to point required by the Technical Director.
5. Any driver not reporting to Tech or refusing teardown will be disqualified.
6. Inspected snowmobiles will not be reassembled by the inspection group.
7. Driver and/or driver's mechanics will be the only two (2) people allowed with the snowmobile in the inspection area.
8. The sanctioning organization assumes no responsibility for impounded snowmobiles.

SEALS

1. Drivers will allow the installation of a seal or seals on the engine and/or body of their racing snowmobiles. To change the seal, mutilate it or try to break it, or re-use it, during the weekend or event where it is installed without the consent of the Race Director, could result in the responsible driver being called before the disciplinary committee for strict discipline. Accidental breakage of the seal must be reported to the Race Director immediately. Drivers/sled owners will provide and preform the required drilling of fasteners, or engine block tabs for the Tech inspector to seal the unit with a uniform wire/lead seal or other device. Sleds within a series may be sealed by other methods, acrylic torque paint, specialty seals, or digital photos of specific items. Affiliates do not have to honor other affiliates seals.

CrossCountry 2026 - 2027

PROTESTS

1. All formal protests must be made in writing, by a driver, in competition at the event, from the class in question, on a formal protest form, accompanied by a cash protest fee (protest fee may vary by region or circuit) two hundred and fifty dollars **($250.00)** recommended**.**
2. When the official protest is made with the fee, the item to be protested must be stated (a general protest will not be accepted), teardown will not be complete until protest is found to be valid or proven unwarranted. If the protest is valid, the fee will be returned to the protester. If the protest is invalid, the fee will be given to the protested snowmobile owner for the inconvenience (to be accomplished before the snowmobiles are released from teardown).
3. There is no need for formal protests in the case of driving infractions during an event. Reports of such alleged infractions should be made to the Race Director, who in turn will request a report from the flagman or assigned official on the course.
4. Race Director has the authority to determine the validity of a protest.
5. No protests/appeals will be accepted that refer to a Race/Technical Director's judgement or decision.
6. It shall not be possible to protest or appeal technical inspection equipment, manual /electronic scoring, or manual/electronic timing equipment.
7. Protests must be filed within thirty (30) minutes following the completion of the daily event or within thirty minutes following the official announcement of results for the class in question whichever occurs first**.** Race directors have the authority to increase the time to file a protest for a competitor but may not shorten the time allowed.
8. Properly filed protests must be addressed by sanctioning body before finalizing class results. ISR must be informed of the protest in writing immediately after the protest is filed. Electronic method of communication preferred**.**

APPEALS PROCESS

The following appeals process shall be applicable for all ISR affiliates and will be the binding operational guide and procedure statement for all affiliates. For any Affiliate that has an internal Appeals Process, the process will only apply to operations inside the association or company and will not have any bearing on race rule interpretation, infractions, misconduct, or other situations that may arise from race activity.

TECHNICAL INFRACTIONS

Driver or team are found in non-compliance with the rules concerning fuel, sled construction, specific dimensions, materials used, or components used not conforming to the rules for each specific class, the following will be the procedure.

Tech Director or Race Director determines infraction and makes the appropriate decision considering the gravity of the offence. The Director may:

a. Verbally warn driver or team.
b. Disqualify driver from event for the class specified.
c. Disqualify driver from all events entered in days competition.
d. Fine driver, if affiliate has a fine process in place in the affiliates bylaws or published operational guide, and the fine system is published in their membership documents.
e. Suspend driver or team for season.

ON TRACK INFRACTIONS

Race Director determines infraction and makes the appropriate decision considering the gravity of the offence. The Director may:

a. Verbally warn driver or team.
b. Disqualify driver from event for the class specified.
c. Disqualify driver from all events entered in days competition.
d. Fine driver, if affiliate has a fine process in place in the affiliates bylaws or published operational guide, and the fine system is published in their membership documents.
e. Suspend driver or team for season.

If the affected driver feels the decision is not correct, he/she may appeal the decision in the following manner.

1. The Appeal must be presented to the affiliate Race Director in writing using the ISR approved form available from the ISR web site. This form must be presented within 30 minutes of the announcement of the disqualification or penalty. Race directors have the authority to increase the time to file a protest for a competitor but may not shorten the time allowed. The Appeal must be accepted by the affiliate.

2. The affiliate must within 24 hours convene a meeting of the owner/ management/ officials of the affiliate and review the offense/ infraction. If the offense is upheld, the driver/team can request a further appeal to ISR and ask for a review by the rules group for the discipline. ISR has 5 days to conduct such review with the rules committee of the specific discipline.
If the Appeal is found valid, all points, money, prizes, etc. are returned/ awarded to the driver/team.
3. If the offense is upheld, the Affiliate and the Driver/team must inform ISR of the situation within 24 hours of the alleged infraction. ISR will then, within 5 working days conduct a review of the situation, convene the appropriate rule review group from the proper discipline/aspect and render a decision. The decision of this session is binding and has no further appeal.

Cross Country 2026 - 2027

Affiliates and Drivers must review the Chain of Custody and submission of components/ fuels/ design concepts presented for the Appeal. If the driver/team does not submit samples, exhibits, photos, etc. of the offending component or fuel, the appeal is considered void, and the penalty stands. If the Affiliate does not accept and submit samples, exhibits, photos, etc. of the offending component or fuel, the appeal is considered void, and the penalty is rescinded, and all prize money, awards and points are returned to the driver/team. There is no appeal of any type to this operational chain of evidence and procedure. The Operational Guideline and Appeals Forms are found here:

Download Appeal Forms Here

Race Operation Infractions Click here Rules Interpretation Issues Click here Business Operation Misconduct Click here

NOTICE

Driver infractions/ disqualifications in drag racing, oval racing, Enduro racing, cross country racing, water cross racing, and speed run racing events will be forwarded to all ISR affiliates.

NOTICE

Drivers, promoters, or any personnel affiliated with ISR snowmobile events who are banned from racing or subject to other major penalties by one affiliate, having completed the hearing process, the decision shall be honored by all ISR affiliates in that discipline.

PRIZES AND AWARDS

1. All prizes, awards and paybacks shall be presented to the official winners or their appointed representatives at the close of the event, unless specifically advertised otherwise as to the time and place of awards.
2. Drivers will not be required to attend award banquets, parties, ceremonies, etc., to receive prizes, awards, or pay-backs, although they are encouraged to cooperate as a courtesy to the promoter.

PIT AND PADDOCK/STAGING AREA

1. Reasonable speeds will be observed in the pit and paddock area. All pit areas are caution zones where utmost in driver awareness is required.
2. Hot pit and staging areas are limited to drivers preparing to race and their pit crewmembers. Minimum age for pit crewmembers in these areas is 14 years old. All persons in these areas must have signed a release and waiver for the event.
3. There is no minimum age for people in paddock, pit parking and cold pit areas. It is recommended that people in these areas be required to sign a release and waiver.

TESTING, TUNE-UP, WARM-UP & PRACTICE

1. Officials must provide proper supervision of the testing areas as well as adequate crowd control to prevent spectators or other persons from moving onto the area.

SUPPORT VEHICLES

1. No unauthorized motorized vehicles will be allowed in the pit or staging area. Snowmobiles must return under their own power. Only disabled snowmobiles may be towed from the track.

DRIVER PROTECTIVE EQUIPMENT

It is the responsibility of the racer to select protective equipment that will conform to ISR guidelines and provide adequate protection. Even though race rules committees and ISR develop guidelines, ISR does not endorse or guarantee specific products or manufacturers of protective equipment. Racers must rely on their own judgment in the selection of helmets and other apparel for protection and durability.

1. Regardless of driver apparel passing prior inspections, compliance with the rules must be made at post-race inspections.
2. No cameras or digital acquisition devises can be attached to any driver's helmet. This will be in effect anytime a race vehicle is on the track, whether it be a test, practice session, or in competition.
3. ISR strongly encourages all drivers in all disciplines / divisions to source helmets that continue to display High Vis Colors/International Orange that cover 75% for Oval Racing (Late Model and Vintage) and 50% for Snow Cross to prevent driver injuries during competitive events.
4. **All helmets must provide full protective coverage and meet the Snell Foundation's 2025 certification standards. Helmets certified under the European ECE 22.06 standard are also approved**. These are also mandatory in the tune-up area. The helmet must be securely fastened at all times. Helmet must display original ECE, or Snell decal as provided by the manufacturer. Decals that are covered or eliminated will be cause for rejection of the helmet. Enclosed cockpit sled drivers must use a current automotive certified helmet meeting Snell SA specification. Competing with a helmet that is not the same as presented at safety inspection will result in disqualification.

Cross Country 2026 - 2027

1. At least one hundred forty-four (144) square inches of visible area on both the driver's front and back (upper body) will be blaze orange in color at all events. Jackets / Pullovers / Jerseys will be teched lying flat on the ground front and back. Gloves and clothing, along with at least above ankle leather boots are mandatory (above ankle boot must have a minimum of 6 inches of leather above the ankle).
2. Eye protection mandatory; facemasks may be required at the starting line at the discretion of the Race Director. If corrective lenses are required to drive a motor vehicle, the driver will also be required to wear them when racing.
3. Hearing protection is mandatory in all non-stock classes in all types of competition. Recommended for all stock class competition.
   The use of upper body protection equipment is mandatory, except for enclosed cockpits. The upper body protection must cover all body areas shown in illustration. It will protect the driver in mid-body and back areas and be capable of resisting penetration and dissipating force of impacts while absorbing the shock of most blows. Typical motocross vests do not meet this rule. **Competing with upper body protection that is not the same as presented at safety inspection will result in disqualification.**

Must have these 4 things

Chest Protection
Back Protection
Shoulder pads
Kidney protection

Optional
Arm Pads

ISR requirements

The upper body protection must cover all body areas shown in illustration. It will protect the driver in mid-body and back areas and be capable of resisting penetration and dissipating force of impacts while absorbing the shock of most blows. Typical motocross vests do not meet this rule.

4. Shin and knee guards are mandatory. Shin and knee guards will be worn on both legs. The shin guard must extend from the instep to above the kneecap and be constructed of an impenetrable material. **Competing with shin and knee guards that are not the same as presented at safety inspection will result in disqualification.**
5. Upper Arm Pads and Elbow pads are highly recommended in all forms of racing.
6. Neck bracing is driver preference and is not required.
7. Drivers, crew members, team owners, staff, and support people may not be physically on the race surface at any time once an event has started. This includes walking the track to inspect for changing track conditions and other concerns. Anyone doing so will be penalized at the race director's discretion. Penalties may range from a verbal warning to ejection from the facility.

GENERAL COMPETITION

FLAG RULES

1. There shall be a meeting between the flagman or his representative and corner flagmen prior to the start of a race so there is a definite understanding concerning the use of the corner flags.
2. Any competitor who does not obey the following rules will be subject to disqualification and/or fine.

GREEN FLAG

1. Start of race or signifies course is clear and race is in progress.

YELLOW FLAG

1. Displayed in track corners or along straightaway signifies there is an additional safety hazard on the track.

RED FLAG

1. The red flag means the race will stop immediately regardless of position of snowmobiles on the track. The red flag will be used if, in the opinion of the Race Director or Chief Starter, the track is unsafe to continue the race. Snowmobiles should be brought to the starting line or pre-designated holding area if possible, using extreme caution. Snowmobiles must not leave the track proper unless directed to do so by the Race Director.

BLACK FLAG

1. On closed course races, should a vital snowmobile component such as clutch guards, ski or ski loop become dislodged or discarded, the starter upon his own recognition or being informed by track officials will display the black flag to the involved driver immediately infraction.
2. A rolled black flag is a warning to a driver that he/she may have an equipment failure or that he/she may have committed a driving infraction. Consultation flag-leave course immediately and report to the Race Director, this does not necessarily mean disqualification; however, failure to obey the rolled black flag could result in disqualification, suspension or fine. On closed course races, should a vital snowmobile component such as clutch guards, mud flaps, ski loops or ski become dislodged or discarded, the starter must display the black flag to the involved driver immediately.

WHITE FLAG

1. When displayed, drivers have started their last lap.

CHECKERED FLAG

1. When the checkered flag is displayed, it means the race is complete.

BLUE FLAG WITH YELLOW DIAGONAL

1. For passing/ this flag will be displayed to snowmobiles being lapped.

SIGNAL LIGHT RULES

1. Sanctioning bodies, which employ signal lights, must inform competitors of their signal light protocol before the start of the event. When light signals are used instead of flags, all competitors must be made aware of signal light procedures prior to the race.
2. Competitors must obey signal lights.
3. The following signals apply to OVAL closed course races:
   a. GREEN LIGHT-Start of race.
   b. YELLOW LIGHT-Caution
   c. RED LIGHT- Stop snowmobile. At the direction of the Race Director, return cautiously to the starting line or designated holding area.

TIMING

1. It is the driver's responsibility to see that his snowmobile triggers the scoring system properly.

RACE STARTING PROCEDURES

1. All drivers must be assembled on the starting line, ready to race within two (2) minutes of notification of their race (except special events). This is defined as when the sleds were summoned to leave the pits. The two-minute clock starts when the first sled of the group leaves the pit and enters the racecourse. All the other sleds in the event/heat/final are required to be on the line within the two- minute window.
2. All participants (including crewmembers entering the start line area, are required to wear eye protection or safety glasses.
3. Snowmobiles must be placed on an approved stand for warm-up and/ or for clearing the track. See CLEANOUT/SAFETY STANDS in this chapter.
4. All snowmobiles on the starting line must have the track and both skis flat on the course surface before starter begins the race.
5. All snowmobiles will be started from a standing position, in a line abreast (unless stated otherwise).
6. The driver's feet must be on the running boards or stirrups. The Race Director may disqualify a driver if the driver's method of start interferes with other contestants.

Cross Country 2026 - 2027

START

1. On a false start a racer will be penalized by the Chief Starter, Race Director or Flagman, and a penalty if designated will apply.
2. There shall be no change of drivers at any time.
3. Events that take place under natural lighting will be terminated thirty (30) minutes after published sunset. This rule must be strictly enforced. Furthermore, this rule assumes that there are no other visibility issues other than sunset. If visibility is reduced beyond the prescribed limit by other factors, racing must be halted before the prescribed time.
4. Any conditions that reduce visibility (prior to 30 minutes after sunset) must be considered before continuing to race. Other conditions include (but not limited to) snow dust, ice dust, fog, haze, clouds, mist, falling snow, falling rain, and smoke.
5. It is the Race Director's responsibility to discontinue racing if the visibility falls below the prescribed level at any time during the day.
6. An injured or otherwise incapacitated driver or damaged snowmobile shall be prohibited from racing with exception that if in the Race Director's judgement, the driver or snowmobile is determined not to be a danger to driver's self or any other competitor. The Race Director's decision is final.

RACE RESTART PROCEDURE

1. The Race Director may have a restart at his discretion. Race Director's decision is final.
2. In the event of an accident involving one (1) or more snowmobiles, the Tech Director may at his sole discretion rule said snowmobile(s) mechanically unsafe to participate in the restart. These snowmobile(s) must be fully safety inspected and approved by the Race/Tech Director before further competition will be permitted. All snowmobiles will be stopped under the red flag. The flagman will notify drivers when to move snowmobiles and he will have them proceed slowly to the point of restart. If only one (1) lap, or less, has been raced, the order of snowmobiles for the restart will be the same as the beginning of the race (with the following exceptions):
3. Any snowmobile causing the stop of a race and a subsequent restart will be placed to the rear of the restart sequence.
4. Any snowmobile unable to immediately return to the starting line will be placed to the rear of the restart sequence.
5. After more than one (1) lap has been raced, the restart position of the snowmobiles reverts to the last officially counted.
6. With the Race Director's permission, only one (1) crewmember (per snowmobile) will be allowed on the track in the event the competitor cannot start his/her snowmobile alone. No mechanical work can be performed by the crew member. He may assist the driver in starting the sled, by pulling the recoil device/rope, controlling throttle, applying choke/enrichener, or alternate fuel delivery squirt bottle, removing the hood, securing hood, and tether switch, handing safety and personal equipment to driver.
7. Drivers and snowmobiles must be on the starting line within two (2) minutes of restart notification.
8. Upon be summoned to restart, all crew members shall leave the track surface except the designated crew member who assists in the engine starting procedure with the driver.

LEAVING THE COURSE

1. Drivers should stay on the confines of the marked course. At the discretion of the Race Director, a driver may be disqualified for leaving the confines of the course. (Check with your ISR afflates policy)

2. Drivers may not stop on the racecourse. If mechanical problems or other factors require stopping, driver will comply with rules for the specific event as prescribed by the officials before the event.

CONTROL OF SNOWMOBILE DURING RACE

1. It is expressly forbidden to drive or push a snowmobile in a direction other than that of normal race traffic. A driver who has spun out is permitted to turn snowmobile around to continue the event provided such action is taken only when the course is clear.

BLOCKING AND FOOLISH DRIVING

1. The deliberate blocking of a faster snowmobile is cause for disqualification at the discretion of the Race Director.
2. Bumping or cutting of lanes is cause for penalty or disqualification at the discretion of the Race Director. Any dangerous or foolish driving, bumping, chopping, or unsportsmanlike conduct on the course, in the pit area, or anywhere else on the race grounds will subject contestant to disqualification at the discretion of the Race Director.

OBSTRUCTION

1. If for any reason a driver is forced to stop on or near the course during an event, it would be the driver's first duty to remove the snowmobile from the track so as not to endanger or obstruct other drivers.
2.

Cross Country 2026-2027

RACE FINISH

1. The finish line will be clearly marked.
2. A driver whose snowmobile is disabled before driver reaches the finish line may be pushed or pulled by driver's own unaided muscular energy across the finish line and will be considered to have completed the race. A competitor is said to have finished the race when driver is in contact with the snowmobile and any part of the snowmobile crosses the finish line.
3. All laps must be completed by first (1st) place snowmobile to declare a finish. All competitors will be given a finish position per number of laps completed. Any drivers that do not complete the checkered flag lap will be scored in order of finish and laps completed. Appropriate points and prize money will be awarded based upon published formulas.

SIGNALS

1. A driver who has spun off or stalled must raise both hands over driver's head to indicate that no more movement will be made until the field has passed and to indicate no injury.

DRIVERS BRIEFING

1. The mandatory meeting (or meetings) will be held at an announced time and place. It will be conducted by the Race Director and Race Promoter. Descriptions of the course, flags, etc. will be made. An interpreter should be used when needed. Pins, stamps, tags, roll call, random call, etc. may be used to check the identity of drivers at the briefing.

RADIOS

1. There will be no independent radio transmission on sanctioning body's radio frequency.
2. Unless otherwise stated, radio communication between crew and driver is not allowed while the driver is on the course.

CLEAN OUT / SAFETY STANDS

1. Snowmobile safety stands that catch and retain track, track lugs, traction components and other items that are thrown by a track are mandatory (see illustration).

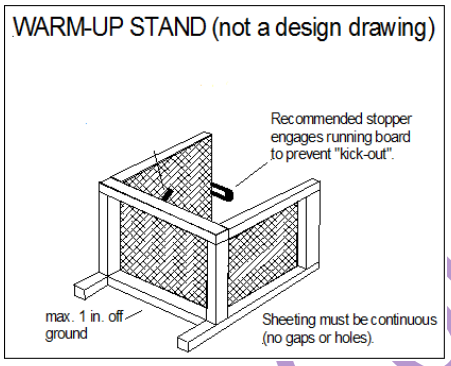

2. The stand must be no more than six (6) inches from the rear of the tunnel opening and no more than twelve (12) inches from the track. The safety stand will be constructed of metal equivalent to 6061/T6 aluminum, 1/8 inch thick. Side panels are mandatory, and they must extend at least to the center of the rear axle. Vertical coverage must be no more than one (1) inch off the ground/ice and as high as the snowmobile support device. Coverage must be continuous (no lightening holes). A plywood liner is recommended to help absorb impact. Safety stand must maintain enough height to prevent track encountering ground/ice surface. The stand must be used whenever the rear of a snowmobile is raised to clean out the engine or track.
3. No full throttle operation while snowmobile is on warm up stand.

MISUSE OF PIT PASSES

1. Improper usage of pit or paddock passes will be grounds for discipline.

FIRE EXTINGUISHER

1. Fire extinguishers must be available in pit, paddock/staging and starting line areas. Fire extinguisher minimum size will be five (5) pounds with ABC fire extinguishing capabilities. Fire extinguishers will be in place before the start of the race. All enclosed trailers/haulers must always carry a minimum of 2 – 5-pound ABC rated fire extinguishers. These extinguishers must always be accessible and functional.

Cross Country 2026 - 2027

GENERAL SNOWMOBILE RULES

These GENERAL RULES apply to all snowmobiles in competition unless so noted. All participants, racers and crewmembers are required to be fully aware of these regulations and must abide by them.

Participants are solely responsible for the condition of their snowmobiles and their competence to operate them.

Where the rules permit or require components or equipment to be installed, replaced, altered, modified, or fabricated, it is the sole responsibility of the driver to select components, materials and/or fabricate the same so that the components will perform safely in competition.

CLASS ELIGIBILITY & SNOWMOBILE ID

1. Unless otherwise specified in specific ISR rules, a snowmobile used in more than one class or division must comply with all rules and safety guidelines for each class or division in which it competes.
2. In stock and stock-based classes, the chassis and engine must have been originally OEM assembled and serial numbered indicating that the snowmobile is a stock qualified unit from the production run of a stock qualified model.
3. All snowmobiles in Modified classes must have serial numbers permanently affixed to the engine and the frame. Duplication of serial numbers is not allowed.
4. If the tunnel, engine, or other serial numbered part is replaced, the serial number must be removed from the replaced part and affixed to the new part.

ENGINE

1. ISR and/or the Race Rules Committees will approve the validity of all engine intake systems.
2. In stock and stock-based classes, the engine must have originated from a stock qualified, OEM produced snowmobile.
3. In stock and stock-based classes, coolant thermostats, regardless of location in the cooling system, may be ran as produced, changed to alternate temperature settings, or completely removed. If removed a control plate/washer to control volume of flow may be installed in its place. This plate shall serve no other function than restricting the flow of coolant.
4. In Stock classes, the OEM for the model exhaust system must remain as produced by the manufacturer and must be fully functional. In Mod classes it will be specifically noted as to which exhaust components may be changed or modified.
5. In two cycle engine classes with individual chamber exhaust for each cylinder, the following minimum standards for straight-thru silencers are required:

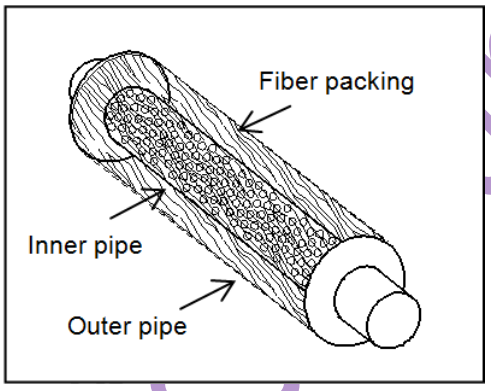

a. Inner pipe must have at least 15 holes per square inch. Minimum hole size 1/16 in. (Minimum 3/8 in. sound absorbing material around the entire circumference of inner pipe).
b. Inner pipe (perforated core) must contact sound absorbing material (fiber or steel wool packing).
c. Outer pipe must be at least ¾ in. larger than inner pipe.
d. Minimum silencer length 3 in.

6. OEM carburetor slide valves and replacement jet components without modification will be allowed in all Stock classes. No modification to carburetor body will be allowed.
7. An adequate return spring on the throttle is required.
   The throttle must be a direct mechanical thumb mechanism, which must be located on the rear side (toward the rear of the snowmobile) of the right-hand handlebar. Throttle must be thumb operated. Twist grip throttles not allowed.
8. All Stock classes - Choke control devices may be disconnected; however, they may not be removed from their mounting location.

DRIVE

1. Brakes shall always be operative. Brake lever must remain on the left, front side of handlebar.
2. The master cylinder, caliper and disk assembly must be commercially available.
3. In Modified classes, anytime the brake assembly has been modified or relocated, the brake disk must be covered with a shield capable of retaining an accidental explosion.
4. The disk pad contact surface area may not be reduced more than 15% of the original pad contact surface area.

Cross Country 2026 - 2027

5. Chains, pulleys, belts and exposed moving parts will be isolated from the driver and other competitors by shields capable of retaining all accidental explosions and component impacts. Integrity of protective shields shall be at the Race and/or Tech Director's discretion. No holes may be drilled in protective shields.
6. Unless otherwise specified, stock class belt guards are acceptable in Stock classes only.
7. Secondary clutch windage plates may be removed in all classes.
8. Custom clutch guards, clutch guards on purpose-built chassis, and specialty chassis may use Carbon fiber, Kevlar, and other materials as reinforcement of standard clutch guard material and design. Newly designed clutch guards must exceed the specifications and limits established in standard clutch guard requirements, See specific disciplines for details. Each specific clutch guard must be submitted to ISR with digital pictures (both installed and uninstalled, at least four views) and a detailed explanation of design, design limitations, and method and type of fasteners used to affix the guard to the chassis. ISR may request an appointment to inspect on site.

SKI SUSPENSION AND STEERING

1. All handlebar ends must be plugged.
2. Only steel suspension springs allowed unless otherwise specified.

DRIVE – CLUTCHES

1. **The use of adjustable clutch weights is allowed in OEM clutches. Either magnets or hardware variety components may be used in drive clutches.**
2. **Conventional solid weights may be altered by lightning or contour grinding. No welding to add weight allowed.**

SKIS & SKI RUNNERS

1. Except where otherwise specified, one cutting edge (steering edge) allowed per ski on snowmobiles with independent front suspension. Any ski edge with over 1/2-inch turndown constitutes a cutting edge.
2. **A maximum of fourteen (14) inches total length of carbide per ski is allowed. (Unless otherwise specified in specific classes).**
3. All ski loops must be at least one (1) inch wide and 5/8-inch-thick or 1-inch diameter round material. The arc of the leading edge of the ski loop must have an outside radius of at least 2 1/8 inches and extend at least 120 degrees upward (see illustration). Plastic ski loops must be affixed with steel bolts.

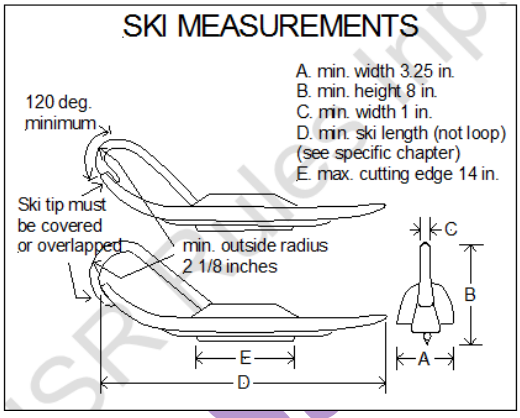

4. The ski loop must overlap the end of the ski and secure to the underside or it must cover the leading edge of the ski entirely. Exceptions may be noted in class specifics.
5. Metal ski loops must be affixed with steel bolts and not welded (Oval-minimum two fasteners).
6. Metal ski loops must have adequate lateral or vertical support bracing to prevent ski tip loops from dislodging or breaking off.
7. Ski tip (not including the loop) must be turned up 1.5 inch from the bottom of the ski (not including the keel(s) or ski runner).
8. No part of the ski may contact the body or suspension through the ski's normal range of travel and/or movement.
9. Ski loop failure of any type is grounds for disqualification.

TRACK SUSPENSION

1. Any OEM type slide rail hyfax may be used as a replacement.
2. Slide rail hyfax can be drilled in all classes.
3. Where allowed in these rules and by local environmental laws, slide rail lubrication systems may be used. No lubrication medium will be allowed that hampers competitor's visibility. No toxic solutions may be used.
4. Only steel suspension springs allowed unless otherwise specified.
5. At safety inspection, track suspension travel will be measured vertically at the rear bumper, two inches of travel must be noted with a max 150 pounds of weight displacement.

Cross Country 2026 - 2027

TRACK AND TRACTION

1. Track dimension rules are specified in each chapter. A 1/8-inch maximum variance in the minimum track width requirement is allowed. No cutting, notching, or trimming of the track is allowed, this is class and discipline specific, and is not allowed unless preceded by an ISR Competition bulletin.
2. Unless otherwise indicated, the track must be centered on the centerline of the tunnel in all modified classes. Modified classes are allowed track offset for installation of brake assembly on front driveshaft. In no case may this offset be more than 2 (two) inches, determined from edge of track to inner edge (side) of tunnel. In Stock and Stock-based classes, the track location must be as produced unless otherwise specified.
3. In all forms and classes of racing, track clips and guide clips may be replaced when worn - guide clips may be removed and replaced with track clips - track clips may be removed and replaced with guide clips - the track must retain the original number of clips with which it was produced.
4. In all forms of racing, there are traction device limitations, see specific chapters for details (see Appendix for traction device measurement details).
5. Identification numbers affixed or molded into tracks by the molder of the track must remain completely visible and unmodified. No traction devise or other item may be installed over the identification numbers on the track. Identification numbers include model number, serial number and/or any other information applied to the track by the molder.
6. Tracks may not be reversed.

FRAME AND BODY

1. A rear snow flap of sufficient material must be installed in a permanent manner and shall be held down (restrained from rearward movement) to restrain traction components, snow, mud, rocks, and other material thrown from the track at all speeds. Recommended materials are 3/16-inch fiber reinforced rubber belting or 3/16-inch semi-rigid plastic such as HD polyethylene or UHMW polyethylene.
2. The snow flap must overlap the widest part of the rear tunnel opening by at least one inch on each side.
3. The rearward movement of the snow flap must be restrained with steel cable (or similar material) to the frame of the snowmobile.
4. The snow flap must be in contact with the course surface when the rider is on the snowmobile. Violation of this rule results in mandatory expulsion from the class.
5. Unless otherwise stated, seats in Stock class must be OEM for the model. OEM seats have no requirements for fabric, padding, dimension, or coverage. If the seat meets manufacturers legal design criteria it is legal for any class, stock or modified.
6. Unless otherwise specified, tunnel protective strips may be added to underside of tunnel to protect the tunnel and cooling system from being damaged by traction products.
7. Snowmobiles used in competition may be painted any color with the following exception, in SNO Cross orange or international orange may not be used.

IGNITION & ELECTRICAL

1. All snowmobiles must be equipped with a tether switch that must always be attached to the operator and be operable . The switch must “kill” the engine by disconnecting the ignition system when the operator and the snowmobile become separated. It is the responsibility of the driver to make certain that the tether is attached to everyone who starts the engine or operates the snowmobile.
2. The tether cord will be securely fastened to the driver. D rings/tabs on gloves and jackets are not designed for the abuse encountered during competition and accidents. It is required have your tether cord mounting location on your jacket or upper body protection in a reinforced area. A race or tech director may disapprove of the attachment method at any time. Drivers will not be allowed to compete until the attachment situation is rectified.
3. Maximum tether cord length will be 4 feet except where noted otherwise. Verification of tether cord length will be determined at tether cord’s fully extended length.
4. The tether cord will be securely fastened to the driver. No alligator clips allowed.
5. The tether switch will be securely mounted in a location on the snowmobile other than on the handlebars or steering column.
6. All snowmobiles must have a handlebar mounted button (on/off) kill switch on the right side within thumb reach (this is in addition to your tether switch).
7. No Wet Cell batteries allowed.

Cross Country 2026 - 2027

FUEL REGULATIONS

NOTICE: It is advisable for all competitors to have their fuel tested at the event, before competing.

1. A contestant appealing a fuel disqualification must bear the expense of the fuel analysis and handling.
2. Allowed gasoline and lubricants:
   a. Only a commercially available pump gasoline that complies with these rules is allowed. (The term "pump gasoline" includes fuels dispensed from service station pumps and racing fuels that are commercially available in fuel cans and drums.) The gasoline may be mixed with petroleum, vegetable, or synthetic based lubricants. The use of oils, fuels (including gasohol), and additives that provide power-boosting characteristics are strictly forbidden.
   b. Only motor fuel compounded of standard pump gasoline and an acceptable lubricant are allowed. Additives that produce power more than that produced by standard pump gasoline and petroleum base oil shall not be permitted. The list of unacceptable additives includes, but is not limited to, alcohol, nitrates, and other oxygen bearing compounds.
   c. No competitor or driver's pit personnel shall possess power boosting additives or agents upon the race premises of the sanctioned event. Violations of this rule shall subject the violator to severe disciplinary procedure.
   d. Aerosol cans of ether are allowed at sanctioned races for starting purposes. No driver will be allowed to carry such cans on their person or their snowmobiles during the race.
   e. Driver statements as to their fuel components will be binding and may be verified by various fuel tests. Drivers must allow officials to test their fuel at any time.
   f. Youth Oval Racing classes, commercially available gasoline that is reformulated with up to 10% ethanol is allowed, the exception being "Big Track" competition for 120, 206 and 200 base class sleds. 120/206/200 and all oval junior classes must use legal fuels containing no ethanol.

FUEL TESTS

WARNING: Gasoline, lubricants, additives, and fuel test reagents are all potentially hazardous materials. Anyone handling them should be aware of the hazards and act accordingly. Race Rules Committees and ISR establish these guidelines and recommended test procedures, but do not assume liability for injury or death caused by the handling of these materials.

Any or all these tests may be employed. Test results may be confirmed from time to time using an infrared spectrometer.

IF ANY OF THESE FIELD TEST ARE FAILED BY A PARTIAPANT HE WILL BE DQ'ED FROM ALL CLASSES THAT HE PARTICAPATED IN FOR THAT DAY.

1. ELECTRICAL CONDUCTIVITY (DI ELECTRIC CONTENT)
2. CERIC NITRATE REAGENT TESTING
3. REAGENT D TEST FOR DIOXANE
4. WATER SOLUBILITY TESTING
5. ANY OTHER TEST APPROVED BY RACE RULES COMMITTEES

Cross Country 2026 - 2027

ENFORCEMENT, DISCIPLINE AND VIOLATIONS

All participants are subject to disciplinary action for violations of these rules in accordance with the sanctioning organization's bylaws. Penalties may include suspensions, fines, loss of points, disqualifications, or any combination thereof. The nature of the penalty is determined by the gravity of the offense and its effect on the safety and good reputation of snowmobile racing. The violations hereinafter set forth are subject to the penalties noted.

EJECTION FROM RACE SITE

1. The Race Director has the right to eject any person(s) from the pit, paddock (staging area) or racetrack area.

CONDUCT OF PARTICIPANT (OFFICIALS, DRIVERS, CREWS, ETC.)

1. Participants are solely responsible for the condition of their snowmobiles and their competence to operate them.
2. No driver may, at any time, ride/drive in such a manner as to endanger life or limb of other riders, officials, or the public.
3. Vulgarity, derogatory or offensive language will result in disciplinary action, ejection from race site and be subject to fines and penalties.
4. Any participant that threatens bodily harm or assaults any official, driver, crew, etc. will be subject to disciplinary action, ejection from race site and be subject to fines and penalties.
5. Clothing displaying vulgar language is not allowed.

DRIVER LIABILITY RELEASE COVENANT NOT TO SUE

1. ***The driver/pit crew, in filing an application to enter the event, elects to use the course of the event at driver's /pit crews own risk, and thereby releases the sanctioning organization together with their heirs, assigns, officers, representatives, agents, tech personal, employees, and members, sponsoring organization and owners of properties on which sanctioned events are to be held from all liability from injury to person, property and/or reputation from tech decisions that may be received by said entrant and from all claims of said injuries to the parties listed above growing out of, or caused by any construction or condition of the course over which the event is held and or piece of equipment that participant entered into competition.***
2. ***Drivers/pit crew and other participants further acknowledge and fully understand that there may also be other risks that are not known or foreseeable at this time, and the above and released persons cannot control these risks, nor have the released persons judged the participants' skill level or ability prior to allowing the participants to participate and consequently is not in a position to guarantee the participants' personal health or safety during the programs, events or activities. DRIVER/PIT CREW KNOWINGLY AND VOLUNTARILY ASSUMES ALL SUCH RISKS, BOTH KNOWN AND UNKNOWN, ANTICIPATED AND UNANTICIPATED, EVEN IF ARISING FROM THE NEGLIGENCE OF THE RELEASED PERSONS OR OTHERS, AND THE PARTICIPANTS ASSUME FULL RESPONSIBILITY AND LIABILITY FOR THE PARTICIPANTS' PARTICIPATION.***
3. ***In consideration of permission and as a requirement of participation in sanctioned events, drivers, pit crew and other participates hereby covenant and agree not to sue the sanctioning organization, or its heirs, assigns, officers, representatives, agents, employees, and members, sponsoring organization and owners of properties on which sanctioned events are to be held, and further agree to fully release, indemnify and hold harmless those persons from any and all causes of action, demands, claims, and loss of injury to person or property or damages, of any nature whatsoever, whether the participation is supervised, unsupervised, however the injury is caused, including, but not limited to the negligence of any released persons.***

DRIVER RESPONSIBILITY

1. The driver has the responsibility for the actions of his crew. It is the driver's responsibility to see that all crewmembers are aware and abide by all rules and guidelines.
2. The condition of a snowmobile is the responsibility of the driver. A driver may be disciplined if a driver's snowmobile is modified to defraud the officials or other competitors.
3. Regarding violations of teams concerning operation of, parking of, reckless operation of support vehicles, the driver may be penalized points, starting position, or given financial penalties, at the discretion of the affiliate.

FRAUD, BRIBERY & ILLEGAL ASSISTANCE

1. In addition to non-compliance with any of the above regulations or rules, the following offenses shall be considered a breach of regulations subject to disqualification.
   a. Bribing or attempting to bribe anyone connected with the race or accepting or offering to accept a bribe.
   b. Competitor accepting any kind of assistance that aids in snowmobile operation during the race.
   c. Any fraudulent proceedings or act of prejudicing the interest of the race.

Cross Country 2026 - 2027

INTOXICATING BEVERAGES & DRUGS

1. Drinking of intoxicating beverages is strictly forbidden by any participant. Anyone showing evidence of having used an intoxicating beverage must leave the premises (specifically pit, paddock (staging area), warm up area, tear down and racetrack) immediately and be subject to disciplinary action by the disciplinary committee. This shall be in effect through the final inspection of snowmobiles.
2. Possession or use of illegal drugs or drug substances, as defined below, is prohibited in any form, by any participant, on the race facility, or in any area considered to be used in the operation of the race facility, such as parking lots or leased properties.
3. Illegal drugs are these substances defined and prohibited by state/provincial and/or federal law.
4. Any person found to be in possession or under the influence of an illegal drug or drug substance on race facility property, as defined above, or any person who is arrested by duly constituted authorities and charged with possession and/or use of illegal drugs or drug substance or any person who is formally charged by a court of law with illegal drug violations, shall be subject to suspension from competition and eviction from the race facility, and denial of further entry to the race facility for a period determined by the disciplinary committee.
5. Any participant who is formally charged by a court of law with an illegal drug violation, upon notification to the ISR Advisory Board, shall be suspended from all forms of participation at any ISR event until such time as the charges are fully adjudicated through the legal process. Any conviction of a formal drug charge by such will be prohibited from taking part in any ISR or affiliated event for a minimum period of three (3) years from date of conviction.
6. Any participant suspended for violation of these rules may be granted an appeal hearing by a board of officials designated by the ISR Advisory Board, provided the suspended participant requests such hearing in writing, within fourteen (14) calendar days of the date of suspension. It is the responsibility of the suspended party to make such a request if a hearing is desired.
7. The cost of convening the board of officials will be borne by the participant prior to the convening of the board.
8. A participant suspended for violation of these rules, EXCEPT IN THE CASE OF PERSONS CHARGED WITH SELLING DRUGS, may, as the result of a decision reached through the hearing process detailed above, be reinstated, if it is mutually agreed that the participant (at his own expense) will produce documentation from a physician licensed within the state or province, certifying that he or she is drug independent, as a result of random and periodical examinations and urinalysis testing made at the request of the ISR Advisory Board.
9. If a participant is using prescription drugs on advice of a physician, such use must be reported to the Race Director prior to the participant's entry into any ISR activities. Failure to notify will subject the participant to penalties as prescribed above.
10. A participant is any person taking part in any event sanctioned by or affiliated with International Snowmobile Racing, Inc., in any form, including but not restricted to drivers, snowmobile owners, mechanics, crew members, sponsors, track officials, pit area personnel, manufacturers and press representatives. All such persons shall be considered public figures that have by their own choice become involved in the snowmobile racing events, with the full understanding that he or she must abide by the rules and regulations established and published by ISR. All participants are responsible for their personal conduct.

RACE DIRECTOR AUTHORITY

1. The Race Director and Technical Director will be certified by the sanctioning organization. (Certification is every other year)
2. The Race Director shall be responsible for the conduct of the race. He shall have the right to make the final determination concerning all aspects of the race and the race facility, including design (these rules and regulations notwithstanding). The Race Director is defined as the overseer/controller of the actual track operations during an event. He has prevue over all aspects of the race and interpreting rules that are applied. He may be a track owner/ or contract manager of a facility, however, “Race Directors” that are of administrative or business side of the event, although they may be referred to as race directors are not the on-track event director. In any case ISR certification is required.
3. He shall have the voice of authority to discipline the participants for violation of the rules. Such discipline will be limited to disqualification of a participant and/or exclusion from an event.
4. Official race results shall be approved by the assigned Race Director and a signed copy will be returned to the promoter for announcement and distribution.
5. Race Director may not have vested interest in the outcome of an event over which he/she officiates. He/she may not officiate over a class in which he/she has a vested interest.
6. Race Directors may compete in events other than those in which they officiate.
7. 4.The Race Director may cancel any race or the complete event for reasons of safety regarding competitors or spectators, and in such case shall determine the awards, if any. The Race Director may shorten the race for any reasons of safety but must give drivers adequate notice in advance
8. A Race Director may judge the mechanical integrity of all timing equipment.
9. Only Drivers (no other participants) will have discussions with the Race Director about protests, and driving complaints, etc., and may approach the Director before the day's events, after an event, or at the direction of the Race Director.
10. The Race Director has the authority to judge the racing abilities of competitors and take appropriate action to ensure the safety of the event.
11. The Race/Tech director shall have the authority to determine structural integrity.

Cross Country 2026 - 2027

12. The Technical Director shall carry and be responsible for the official specifications and certain instruments for measurements concerning verification and control of contestants' snowmobiles. The Technical Director may not officiate over a class in which he has a vested interest.
13. Technical equipment and specifications will not be used for any purpose other than the conduct of the sanctioned event.
14. Decisions of the Race/Tech Director may be reviewed by the board of the sanctioning body.
15. Decisions made at an event shall not be overturned without a formal appeal. Notice of the appeal process shall be given and a suitable period for all parties to prepare must be allowed.

No express or implied warranty of safety shall result from publication of or compliance with THE RULES and regulations IN THIS PUBLICATION. They are intended as a guide for the conduct of the SPORT AND are in no way a guarantee against injury or death to spectators or participants.

Cross Country 2026 - 2027

CROSS COUNTRY RACING

CROSS COUNTRY SANCTIONS AND CLASSES

1. A Cross Country sanctioned event is one raced primarily over land following a defined and marked route from one point to another. It may follow a looped course, 3 miles or more in length, with more than one lap around the same course. Total distance must be twenty-five (25) miles or more.
2. SPECIAL RULES: The sanctioning body may impose special rules for certain events with the approval of ISR in writing before the event. Any such special rules must be made available to all competitors with sufficient time for competitors to comply.

LAKE ENDURO SANCTION

1. A Lake Enduro sanctioned event is one raced primarily over a lake ice/snow surface, following a defined and marked course. It may follow a looped course, with more than one lap around the same course. No land running allowed unless necessary. In such cases, distance raced on land must be as short as possible and sufficient ice/snow base shall be maintained.
2. The course must be three (3) miles or more in length and total distance must be twenty-five (25) miles or more.
3. Terrain X by Northwoods Challenge is a specialty Lake Enduro format.

TEAM CROSS COUNTRY SANCTIONS

1. A team Cross Country event is one in which two or more drivers compete as a team. Team members must enter checkpoints and the finish area together. The time for the team is the time at which the last member crosses the line.
2. Format, entry fees and pay back are at the discretion of the promoter and approved by the region. Prospective entrants must be informed of format, entry fees and pay back before registration.

SPECIAL SANCTIONS

1. Can be any snowmobile event that does not fall under any of the specific circuits or classes, but meets established safety standards, applicable laws and/or approved insurance coverage.
2. All special sanctions and specialty classes must be approved in writing by ISR before competition.

CROSS COUNTRY CLASSES

The intent of these classes is to establish races in which all can compete at their level of personal and equipment ability. The class structure is organized in such a way as to enable as many snowmobiles as possible a place to successfully compete. If class rules are not followed, the class name shall not be used, and the class shall be run as a specialty class with ISR's prior approval.

Pro Factory 600.

Sled can be no earlier production, than 7 years from current model. Example for 2025-sled must be produced after 2019. *This will take effect June 1, 2023*.

Semi Pro 600 Improved

Semi Pro Factory 600

7-year production rule applies. (See above)

Sport 600 Improved

Sport Stock 600

Junior 10-13

Expert class sleds with 50% throttle block

600 cc limited sleds with 50% throttle block and exhaust valve closed.

Junior 10-13 Girls

Expert class sleds with 50% throttle block

600 cc limited sleds with 50% throttle block and exhaust valve closed.

Junior 14-17 Girls

Legal sleds

600 Limited class sleds with 50% throttle block.

Cross Country 2026 - 2027

JUNIOR 14-17

Legal sleds
600 Limited class sleds with 50% throttle block.
Transition Class 8-12

SPECIALTY CLASSES

Pro Open
Pro Stock
Semi Pro Stock
Sport Stock
Pro Enduro/Soo Class
Masters
Veterans
Sport Improved
Women
Expert 600 LTD
Sport 600 LTD
Expert 600 LTD Improved
Sport 600 LTD Improved
Expert 600 Limited 600cc (Limited class sleds with 50% throttle block.)

Expert 600 Limited Improved (Chassis and external Engine mods allowed)

600cc Limited class sleds with 50% throttle block.

GENERAL COMPETITION RULES

These rules apply to all events and classes unless so noted. All members and racing personnel including mechanics, pit and staging area personnel and promoters are expected and required to be fully aware of all rules and they are expected to follow and abide by them.

GENERAL REQUIREMENTS AND GENERAL REGULATIONS

1. Where visibility is limited, such as on a hill or corner, a flagman shall be placed at a point of driver's vision at least two hundred (200) feet ahead of the potential hazard. He shall display a yellow flag if the course is not clear.
2. Temperature and snowfall shall be considered before starting a race. The race may be delayed shortened or cancelled if the weather is deemed too severe.
3. The number of machines in a flight shall be limited to twelve (12).
4. Radio communications shall provide coverage for surveillance, ambulance, and snowmobile recovery. The main base shall be located near the Start/Finish line and the Race Director, or his designate, will remain in contact. Race officials shall visually cover the entire racecourse, if possible.
5. A driver must always be prepared for another snowmobile to pass and must therefore be on the lookout for other snowmobiles approaching from behind. Drivers will not hinder or obstruct an overtaking vehicle. A slower driver is to move over for the passing snowmobile.
6. Driver may carry repair parts during the race if they do not protrude hazardously beyond the outside dimensions of the snowmobile. Drivers only (no outside assistance except Team Cross Country) may work on their machines on the course proper, but not in the path of other machines that are racing and must use only parts and tools carried on the course by themselves at the beginning of the event.
7. It is the driver's responsibility to inform the nearest race official of any injured drivers on the racecourse.
8. Teardown is accomplished by impounding the first (1st) ten (10) snowmobiles, mandatory teardown, and inspection of the first five (5) place machines.
9. Drivers, crew members, team owners, staff, and support people may not be physically on the race surface at any time once an event has started. This includes walking the track to inspect for changing track conditions and other concerns. Anyone doing so will be penalized at the race director's discretion. Penalties may range from a verbal warning to ejection from the facility.
10. **. Fuel Jug/Container rules -All Classes: LC style fuel jug is the only approved fuel container for fueling at fuel stops. Open class can utilize a dry break style fuel can. However, if used the sled must be equipped with the proper dry break receiver system. (Captive venting)**

Cross Country 2026 - 2027

REGISTRATION AND ENTRY

1. Any class event can be eliminated when there are less than two (2) official entries at the close of registration.
2. Entry fees are regulated on a regional basis.
3. Payback is regulated by the region.
4. Drivers may be assessed a late registration fee.

DRIVER'S RULES

1. Senior competitor must be at least eighteen (18) years of age. (Refer to JUNIOR COMPETITION SECTION for more information.)
2. Driver and his crew members must abide by all (Rules and Regulations) set forth under the chapters of this manual titled Competition Race Director Authority, Snowmobile Equipment, Verification and Control, Driver Protective Equipment and Enforcement and Discipline.
3. Driver Infraction/Disqualifications in any Cross Country or Sno-Cross event must be forwarded to all ISR Cross Country and Sno-Cross affiliates.
4. Eye protection mandatory, two (2) pair or types of eye protection are recommended.
5. A driver's assigned number must not be used by another driver. The driver assigned number must be displayed on both sides of the snowmobile hood. The number must be six (6) inches high (eight (8) inches is highly recommended), 3/8 inches wide and displayed in contrasting colors; these numbers must be displayed on the machine in a permanent manner before it will be allowed to race. Yearly members are to have their numbers painted on by their second race.
6. Drivers will carry their membership cards at all sanctioned races and show them to the Race Director and other designated officials when asked, along with other substantiating evidence that will prove their identity. On all driver membership cards, the driver's blood type must be noted if provided on membership application. It is recommended that the driver's medical record be carried with the membership card.
7. It is mandatory that the driver's helmet and at least one hundred forty-four (144) square inches of visible area on both the driver's front and back must be of bright (florescent) orange color.

DRIVER MAY BE DISQUALIFIED FOR:

1. Running without a hood or shroud in position.
2. Running with altered numbers.
3. Running with bibs not in position.
4. Road running when marked for ditch will result in disqualification.
5. Not following the prescribed route (intentional course cutting, missing check points, etc.). If lost on prescribed route, no time adjustments will be made for driver error (subject to Race Director).
6. Receiving unauthorized assistance.
7. The driver or a group of drivers attempt to harass race officials, in any manner.
8. Use of radio or CB systems.
9. Speeding through check points and gas stops.
10. Not complying with checkpoint procedures.
11. Dangerous driving tactics.
12. Failure to stop for Post-Race Technical Inspection.
13. Failure to use proper safety equipment.
14. Unsafe operation in the pit area.
15. Allowing non-registered drivers to operate driver's snowmobile on track during a practice lap or during race.

DRIVER MAY BE PENALIZED AT START OF RACE FOR THE FOLLOWING:

1. Jumping the start.
2. Causing a restart.

Cross Country 2026-2027

GENERAL SNOWMOBILE RULES

DRIVE

1. Aluminum and/or carbon brake disks not allowed.

SKI & SKI RUNNER

1. Maximum carbide to carbide ski stance must not exceed forty-three- and one-half inches (43.5 inches) Center to center distance will be measured as follows: on units with centered carbide on skis, carbide to carbide dimensions with skis straight ahead and rider in seated position in natural contour of the seat will determine measurement. Measurement will be taken at the carbide cutting edge. On units with offset carbide, outer carbide cutting edge on right ski to outer carbide cutting edge on the left ski, with skis straight ahead and rider in seated position in the natural contour of the seat will determine the measurement. Measurement will be taken at the carbide cutting edge as noted by location as the unit comes off the racecourse. measurement may be by carbide scratch marks in natural terrain, or by carbide impressions on a soft wood lath when the skis are placed on the measurement device with driver in seated position.
2. Unless otherwise stated here, skis and ski loops must conform to the ski rules in GENERAL RULES AND REGULATIONS section.
3. Carbide ski runners (mandatory for lake races) must not exceed 5/8-inch width and 5/8-inch depth from the lowest point of the ski (including carbide insert). Minimum width 3/8 inch.

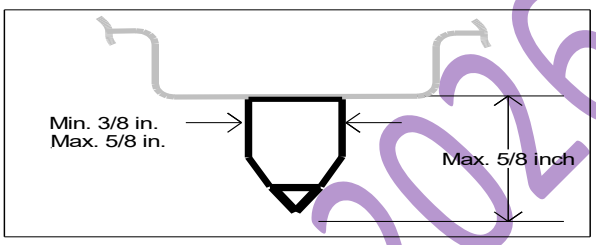

4. Any commercially available skis and ski runner(s) that conform to these rules are allowed including multiple edged runners and multi-keeled skis.
5. Skis and ski loops must be intact at the start of each race. Ski loop leading edges not one (1) inch in width or not meeting the minimum radius rule must be padded.

TRACK SUSPENSION

1. Slide rail lubrication not allowed.

TRACK AND TRACTION

1. Plates welded onto track clips must be no longer or wider than track clip. Only one plate allowed per track clip. Only one traction point allowed per weld-on plate. Rubber between ends of track clip may be trimmed to allow welding on stud plate. Trimming limited to width of plate.
2. The track studs may be no more than 3/8 inches above the track lug.
3. Specific track modifications are allowed as noted in class rule sections.
4. See specific classes for additional track rules.

FRAME AND BODY

1. Reinforcing by welding and/or bracing is allowed.
2. Venting for the purposes of brake cooling is allowed. All venting for brake cooling purposes must contain and direct airflow to the brake caliper and disc assembly only. Any specialized vents that allow outside cooling air beyond the brake system or derive cooling air from the vent before it travels to the brake system is not allowed.

IGNITION AND ELECTRICAL

1. A functional secondary safety shut-off (kill switch) that will terminate ignition is mandatory in all classes. The switch must be located on the right side of the handlebar.

CrossCountry 2026 - 2027

2. If a driver becomes separated from the snowmobile and the engine continues to run or the safety disconnect switch (tether switch) fails to function or is not properly fastened/attached to the driver while the engine is running, the driver may be disqualified from the heat in which the infraction occurred.
3. No aftermarket device allowed which interrupts ignition or controls the brake system for launch control or traction control unless OEM for the model.
4. Headlight and taillight must be operational at the start of each race. Glass lenses must be taped over with transparent clear tape. Taillight cannot be battery operated.
5. Data acquisition and data acquisition systems allowed.

STOCK SNOWMOBILE RULES

In stock and stock- based classes, no change or modification is allowed unless specifically allowed by these rules. If these rules do not specifically allow a change or modification, then it must be assumed that the change or modification is not allowed.

GENERAL

1. The snowmobile must have original OEM engine, hood, intake, exhaust, frame, suspension, cowl, fuel tank and drive. Named components must be of same model and year, or properly filed OEM replacement parts which supersede original OEM parts.

ENGINE

1. Engine must remain in original mounting location.
2. No component of the engine may be altered changed or enlarged from the engine manufacturer's original stock specifications, nor may any additional components be added to the engine. Blueprinting will not be allowed. No removal of material whatsoever is allowed. This is to include polishing, port matching, deburring, abrasive blasting surfaces or material removal for the purposes of engine balancing or other reasons.
3. Maximum cylinder overbore for wear or cylinder repair cannot exceed .020 inch.
4. Stock OEM pistons only are allowed for replacement.
5. There may be no more than one cylinder base gasket to a cylinder. No changes in engine dimensions can be made by gasket adjustments.
6. Spark plugs do not have to be OEM.
7. Rotary valve timing/duration must remain as filed by the manufacturer.
8. No modification to the carburetor body allowed.
9. OEM carburetor slide valves and replacement jet options (without modification) are allowed.
10. An adequate return spring on the throttle is required.
11. Choke mounting location may be moved for driver comfort. Choke system may be disconnected.
12. No pressure charging allowed. The engine air intake system is to include any: cowl vents, air box, noise reducing foam (cowl vents & air box), carb boots, carburetors, clamps, rotary valves, reed valves, carburetor flanges, and oil injection nozzles that are original OEM equipment for that make and model. Deep snow cover/foam must remain in place.
13. No changes or modifications are allowed to any part of the engine air intake system or mounting locations.
14. CDI/ECU module may be reprogrammed.
15. No pressurization of fuel tanks or lines allowed.
16. If oil injection is OEM standard, oil injection system and all associated components must be installed in their OEM configuration but may be disconnected. Oil injection nozzles may be removed or plugged. Premixed oil and fuel may be used.
17. No additional engine cooling systems allowed.
18. Engines will have OEM tags and/or serial numbers affixed to the engine.
19. The exhaust system is to include any, header flange or pipe, Y pipe, expansion chamber, pulse charger, muffler, and tail pipe that are original OEM equipment for that make and model. No changes or modifications are allowed to any part of the exhaust system or mounting locations.

DRIVE

1. Must have original OEM drive clutch as supplied by the manufacturer for that make and model. Any OEM within the brand secondary may be used.
2. Any springs, weights or ramps may be used. No clutch engagement RPM limit.
3. No machining on clutches to accommodate springs and weights.
4. In the primary clutch, metal may be removed but not added to ramps or flyweights.
5. Secondary clutch cams may be cut to any angle. Billet helixes allowed.
6. No overdrive machining.
7. Drive belts do not have to be OEM.
8. Any drive chain and sprockets may be used, any belt drive and drive cogs may be used.
9. Chain case / Belt drive case must be original OEM for the model equipment. Must remain in original mounting location. Chain/belt drive tensioner may be changed to any OEM equipment.

Cross Country 2026 - 2027

10. Track drive shaft and/or track drive sprockets may be changed to any that are OEM for the brand. Shaft material may not be changed from OEM for model.
11. Sprocket diameter may be trued round.
12. Brakes systems may be changed or altered but must be always operational. Brake components must be commercially available. Brake disc may not be relocated and must remain in stock as produced location. Liquid cooled systems allowed. Brake disk may not be modified in the pad contact areas. Brake disk hub may be modified for mounting. OEM diameter and thickness must be maintained, (Clarification) {Larger / thicker are acceptable, but not smaller / thinner. } The brake disk material may not be substituted with any other material. Aluminum and/or carbon brake disks are not allowed.
13. In Modified classes, anytime the brake assembly has been modified or relocated, the brake disk must be covered with a shield capable of retaining an accidental explosion**.** If a replacement disc is of the same thickness and diameter as OEM, then shielding will not apply.
14. Brake control handle must remain in OEM location on the left, front side of the handlebar.
15. Existing vents may be used to direct cooling air to the brake components. Brake disk shall not extend outside of the bodywork.+
16. **An auxiliary brake cooling fan of up to 4" diameter is allowed. Properly constructed ducting, hose routing, and electrical wiring, to facilitate this installation will be determined by the technical inspector. Inspectors' decision is final. All venting for brake cooling purposes must contain and direct airflow to the brake caliper and disc assembly only. Any specialized vents that allow outside cooling air beyond the brake system or derive cooling air from the vent before it travels to the brake system is not allowed.**

SKI SUSPENSION & STEERING

1. Front suspension must remain in original mounting location, in both bulkhead and spindle housing. No substitution of material allowed.
2. Sway bar must remain in OEM location but does not have to be functional. Sway bars must be OEM but may be interchanged with other stock models offered by the manufacturer.
3. Suspension travel may be limited. Must maintain two (2) inches of remaining compression travel with driver on snowmobile.
4. Reinforcement of components is allowed by welding or bracing. Structural integrity must be maintained.
5. Spindles may not be shortened.
6. Any shock allowed. Replacement may be shorter than OEM for the model shock but may not be longer.
7. Handlebars must be intact at the start of each race day. Any commercially available handlebar allowed. May be altered to fit the driver. Open ends must be capped. Handlebars must be padded. Column or post must remain in its OEM position. Grips and controls may be modified. Throttle must be opened with a thumb mechanism located on the handlebar to the rear of the machine (no twist grips).
8. Commercially available handlebar risers, vibration mounts and relocation mounts allowed.
9. Any spring may be used on the suspension. May be shortened or heated. Springs may be removed and replaced with another type of cushion device.

SKIS & SKI RUNNERS

1. Aftermarket skis allowed. Skis must be commercially available and marketed thru normal sales activity. Must meet ski diagram in GENERAL RULES AND REGULATIONS section.
2. Skis may not be interchanged between brands.
3. May reinforce skis on the topside only.
4. Ski skins allowed.
5. Maximum ski trimming (for the rear of the ski): From rear of ski, both sides can be trimmed to a maximum of 9 inches forward. The rear of ski can be trimmed to a minimum of 1 inch in width. Rear tip corners should have a rounded radius. Ski material can be removed if it does not affect the overall length and width of the ski. Ski keel material can be removed to except ski runner.
6. Turning material may be altered to an angle of not less than sixty (60) degrees inside included angle.

TRACK SUSPENSION

1. Suspension must be OEM for the make and model. Must remain in original mounting location or optional locations drilled, pre-drilled or marked in backing plate by the manufacturer. No substitution of material allowed.
2. Rails may not be bent or shortened.
3. Wheels (rear axle idler and marginal snow) may be added or removed along with mounting brackets from an OEM wheel kit. Wheel diameters may be trued round.
4. Any hyfax allowed.
5. Any shock allowed. Replacement may be shorter than OEM for the model shock but may not be longer.
6. Any spring may be used in the rear suspension. Suspension spring may be shortened or heated.
7. Suspension travel may be limited. Must maintain two (2) inches of remaining compression travel with driver on snowmobile.

TRACK & TRACTION

Cross Country 2026 - 2027

1. Any commercially available, one-piece molded rubber track allowed. Track must have been properly filed by the manufacturer of the snowmobile.
2. In Pro and Semi Pro 600, Minimum track lug height is 1.25 inches with manufacture tolerance allowed. SPEC Tracks will be as follows: Camso Ripsaw, Ripsaw II, and Cobra as produced.
3. Length and width of OEM track shall be as produced by the snowmobile manufacturer.
4. Configuration of track, including length and width, must allow for installation without modification to track, frame, tunnel, suspension, or drive components.
5. No cleats or partial cleats may be added.
6. Grouser bars and rubber snow lugs must remain OEM height and width.
7. Any commercially available guide/track clips may be used.
8. Tracks may not be reversed.
9. Stud backing plate max. size: 2 inches X 2 1/4 inches.

FRAME & BODY

1. Snowmobile overall width is as produced.
2. All chassis will have OEM tags and/or serial numbers affixed to the frame.
3. Removal of any material from total machine by means of heat, acid, drilling, grinding, abrasive blasting, peening, substitution, or total elimination will not be allowed.
4. Windshields must be OEM or equal to an OEM windshield in dimensions and mounted in OEM location as filed. They may be altered for handlebar movement. Minimum stock windshield height must be maintained. Must have a safety edging. Must be intact at the start of each race day.
5. Seat must remain OEM for the model. Padding may be added or subtracted to improve driver comfort and safety. Minimum cushion thickness is five (5) inches, measured without weight on seat. Seat must remain in OEM for the model location. Must be upholstered.
6. Access openings are allowed for component removal or service, but closures must be made of original type materials. Vents/scoops must be OEM for the model. No additional vents or scoops may be added. Crankcase and/or brake cooling ducts must remain within the confines of the snowmobile and only use an existing vent. Vents may be covered or closed.
7. Hood may not be removed.
8. Skid plates may be added for protection of snowmobile bottoms. Skid plates must be securely fastened.
9. Additional plate material may be added to the tunnel at the suspension mounting holes.
10. Tunnel protective wear strips may be added, removed, or altered. Liquid spray coating allowed.
11. It is highly recommended that the sides of the rear tunnel opening be enclosed with comparable tunnel material. The tunnel covering is required to keep a ski or driver's extremities from entering the tunnel area.
12. Front and rear bumpers and nose cones may be added but not removed. Added items must not be a safety hazard.
13. Fuel tanks must be OEM for the model or an OEM designated replacement tank for the model.
14. Fuel lines must be free of obstructions by other machine components.

IGNITION & ELECTRICAL

1. Ignition must be OEM for the year and model.
2. CDI/ECU module may be reprogrammed.
3. Fixed ignitions may be advanced or retarded a maximum of 4°.
4. No aftermarket device allowed which interrupts ignition for launch control or traction control unless OEM for the model.
5. Wiring may be removed.
6. Instrumentation may be added but must not present a safety hazard. Instruments may be disconnected but not removed.
7. Head and taillights must be original OEM equipment for the model. Must remain in original mounting location.

Improved Stock

In stock and stock-based classes, no change or modification is allowed unless specifically allowed by these rules. If these rules do not specifically allow a change or modification, then it must be assumed that the change or modification is not allowed.

All Improved Stock class rules follow Stock rules with the following

1. OEM stock chassis
2. OEM bore and stroke, no internal motor modifications allowed
3. Bolt on performance parts (i.e., pipes, exhaust can, ECU tuner) allowed

Cross Country 2026 - 2027

FACTORY 600 CLASS

The snowmobile must have original OEM engine, hood, intake, exhaust, frame, suspension, cowl, fuel tank and drive. Named components must be of same model and year, or properly filed OEM replacement parts which supersede original OEM parts.

CLASS SNOWMOBILE CRITERIA

Any stock production snowmobile of 600 cc or less engine displacement volume, or equivalent 4 stroke model. Snowmobile must be fuel injected and will be required to run on straight gasoline. No oil/gasoline premixed fuels will be provided. Production quantities must be within ISR stock qualified manufacturers guidelines. If the Stock Factory 600 Snowmobile meets rules for this class, it my jump up classes without changes as long as the factory 600 trim is unchanged.

ENGINE

1. Engine must remain in original mounting location.
2. No component of the engine may be altered changed or enlarged from the engine manufacturer's original stock specifications, nor may any additional components be added to the engine.
3. Blueprinting will not be allowed. No removal of material whatsoever is allowed. This is to include polishing, port matching, deburring, abrasive blasting surfaces or material removal for the purposes of engine balancing or other reasons.
4. Maximum cylinder overbore for wear or cylinder repair cannot exceed .020 inch.
5. Stock OEM pistons only are allowed for replacement.
6. There may be no more than one cylinder base gasket to a cylinder. No changes in engine dimensions can be made by gasket adjustments.
7. Spark plugs do not have to be OEM.
8. Rotary valve if used, timing/duration must remain as filed by the manufacturer.
9. On four stroke models all valve train components and timing must remain OEM for the model.
10. No modification to the throttle body allowed.
11. No pressure charging allowed. The engine air intake system is to include any: cowl vents, air box, noise reducing foam (cowl vents & air box), injector mounts, fuel rails, and cylinder throttle body adapters, clamps, rotary valves, reed valves, intake or exhaust valves, and oil injection nozzles that are original OEM equipment for that make and model. Deep snow cover/foam must remain in place.
12. No changes or modifications can any part of the engine air intake system or mounting locations.
13. CDI/ECU module may be reprogrammed.
14. Oil injection system and all associated components must always be installed in their OEM configuration and in operation .
15. No additional engine cooling systems allowed.
16. Engines will have OEM tags and/or serial numbers affixed to the engine.
17. The exhaust system is to include any, header flange or pipe, Y pipe, expansion chamber, pulse charger, muffler, and tail pipe that are original OEM equipment for that make and model. No changes or modifications can any part of the exhaust system or mounting locations.
18. Thermostats must remain in place and remain functional.
19. Cooling system must remain in the stock location except tunnel mounted heat exchangers may be relocated for stud clearance but must remain in the confines of the tunnel.

DRIVE

1. Must have original OEM drive clutch and driven clutch (torque converter) as supplied by the manufacturer for that make and model.
2. Any springs, weights or ramps may be used. No clutch engagement RPM limit.
3. No machining on clutches to accommodate springs and weights.
4. In the primary clutch, any commercially available ramps, weights, or springs may be used.
5. Secondary clutch cams may be cut to any angle. Billet helixes allowed.
6. No overdrive machining.
7. Drive belts do not have to be OEM.
8. Any drive chain and sprockets may be used , any belt drive and drive cogs may be used.
9. Chain case / Belt drive case must be original OEM for the model equipment. Must remain in original mounting location. Chain/belt drive tensioner may be changed to any OEM equipment.
10. Track drive shaft and/or track drive sprockets may be trued.
11. Sprocket diameter may be trued round.
12. Brakes may be changed or altered but must be always operational. Brake components must be commercially available.
13. Liquid cooled systems allowed.

Cross Country 2026 - 2027

14. Brake disk may not be modified in the pad contact area. Brake disk hub may be modified for mounting. OEM diameter and thickness must be maintained. Any brake disk used must be of the same material as OEM for the model disk. No aluminum or carbon disks allowed.

15. Brake control handle must remain in OEM location on the left, front side of the handlebar.

SKI SUSPENSION & STEERING

1. Ski suspension and steering must be OEM for the model.
2. Front suspension must remain in original mounting location, in both bulkhead and spindle housing. No substitution of material allowed.
3. Sway bar must remain in OEM location but does not have to be functional. If used, sway bars must mount and fit to chassis in the same geometric position as the production sway bar. Sway bars may be interchanged with other stock OEM model sway bars offered by the manufacturer or any aftermarket bars. This allowance for change applies to the sway bar and mounting bolts only. Sway bars must be steel only.
4. Maximum carbide to carbide ski stance must not exceed forty-three- and one-half inches (43.5 inches) Center to center distance will be measured as follows: on units with centered carbide on skis, carbide to carbide dimensions with skis straight ahead and rider in seated position in natural contour of the seat will determine measurement. Measurement will be taken at the carbide cutting edge. On units with offset carbide, outer carbide cutting edge on right ski to outer carbide cutting edge on the left ski, with skis straight ahead and rider in seated position in the natural contour of the seat will determine the measurement. Measurement will be taken at the carbide cutting edge as noted by location as the unit comes off the racecourse. measurement may be by carbide scratch marks in natural terrain, or by carbide impressions on a soft wood lath when the skis are placed on the measurement device with driver in seated position.
5. Reinforcement of components is allowed by welding or bracing. Structural integrity must be maintained.
6. Any shock allowed.
7. Handlebars must be intact at the start of each race day. Any commercially available handlebar allowed. May be altered to fit the driver. Open ends must be capped. Handlebars must be padded. Column or post must remain in its OEM position. Grips and controls may be modified. Throttle must be opened with a thumb mechanism located on the right-hand handlebar to the rear of the machine (no twist grips).
8. Commercially available handlebar risers, vibration mounts and relocation mounts allowed.
9. Any spring may be used on the suspension. Titanium springs not allowed unless OEM for the model.

SKIS & SKI RUNNERS

1. Any commercially available ski. Ski must be a minimum of 39" long and must meet ski diagram in GENERAL RULES AND REGULATIONS section.
2. Skis may not be interchanged between brands.
3. May reinforce skis on the topside only.
5. Cutting edge material may be altered to an angle of not less than sixty (60) degrees inside included angle.

TRACK SUSPENSION

1. Suspension must be OEM for the make and model. Must remain in original mounting location or optional locations drilled, pre-drilled or marked in backing plate by the manufacturer. No substitution of material allowed.
2. Rails may not be bent or shortened.
3. Wheels (rear axle idler and marginal snow) may be added or removed along with mounting brackets from an OEM wheel kit. Wheel diameters may be trued round.
4. Any hyfax allowed.
5. Any shock allowed.
6. Any spring may be used in the rear suspension, except titanium springs unless OEM for the model. Suspension springs may be shortened or heated.
7. Rear axles may be replaced, and additional rear idler wheels added for safety considerations. Axles, spacers, shims, bushings, and other components may be changed to allow installation of additional wheels. The only wheels allowed to be added will be OEM wheels of the same diameter as the original wheel (Clairifcation12/9/14) Rear axle shafts may be material substituted aluminum for steel, and steel for aluminum only. No titanium shafts unless OEM for the model.

TRACK & TRACTION

1. Track lug height is 1.25 inches with manufacture tolerance allowed. SPEC Tracks will be as follows: Camso Ripsaw, Ripsaw II, and Cobra as produced.
2. Length and width of replacement track shall be as originally produced by the snowmobile manufacturer.
3. Track clips/guide may be added

FRAME & BODY

Cross Country 2026 - 2027

1. Snowmobile over all width is as produced and measured at the spindle centerline. For this specific class sled width at the outside dimension of the skis is not considered the measurement point for overall width.
2. All chassis will have OEM tags and/or serial numbers affixed to the frame.
3. Removal of any material from total machine by means of heat, acid, drilling, grinding, abrasive blasting, peening, substitution, or total elimination will not be allowed.
4. Windshields must be commercially available and mounted in OEM location. They may be altered for handlebar movement. Must have a safety edging. Must be intact at the start of each race day.
5. Seat must remain OEM for the model. Padding may be added or subtracted to improve driver comfort and safety. Minimum cushion thickness is five (5) inches, measured without weight on seat. Seat must remain in OEM for the model location.
6. Access openings are allowed for component removal or service, but closures must be made of original type materials. Vents/scoops must be OEM for the model. No additional vents or scoops may be added unless specified for safety or durability. Crankcase cooling ducts must remain within the confines of the snowmobile body/hood. Vents may be covered or closed.
7. Venting for the purposes of brake cooling is allowed. Ducts/ Scoops maybe added for purposes of brake venting. All venting for brake cooling purposes must contain and direct airflow to the brake caliper and disc assembly only. Any specialized vents that allow outside cooling air beyond the brake system or derive cooling air from the vent before it travels to the brake system is not allowed.
8. Skid plates may be added for protection of snowmobile chassis. Skid plates must be securely fastened.
9. Additional plate material may be added to the tunnel at the suspension mounting holes.
10. Tunnel protective wear strips may be added, removed, or altered.
11. It is highly recommended that the sides of the rear tunnel opening be enclosed with comparable tunnel material. The tunnel covering is required to keep a ski or driver's extremities from entering the tunnel area.
12. Aftermarket front and rear bumpers may be added. Bumpers must be commercially available through normal sales activity. Added items must not be a safety hazard. Technical inspector's decision is final.
13. The stock fuel tank may be replaced by a factory/manufactures designated replacement fuel tank. The volume of this tank cannot exceed a maximum of 13 US gallons.
14. Snow flap must be OEM molded snow flap for the make and model as designated by the manufacture. Additional material maybe added to help cooling.

VENTING

Venting in Factory 600 Cross Country. Applies to all Cross-Country classes that use Factory 600 sleds approved by ISR. Manufacturers will be permitted to devise vent kits for Stock Factory 600 sleds to aid in controlling under cab heat, air movement and improve safety in the areas affected by the beyond design limits operating temperatures encountered in competition.

ALLOWABLE ADDITIONAL VENTING FOR All STOCK CLASS FACTORY 600 CROSS COUNTRY SLED

1. An additional 36 square inches (area) of venting will be allowed/permitted.
2. Venting may be located anywhere in the cab/hood/ belly pan structure, including dashboard panel.
3. Venting may be utilized for air in or air out.
4. Venting shall not be directed, channeled, or ducted to specific areas. All venting must use natural airflow to cool or move air through the area attempting to cool or assist in airflow.
5. Size of venting in each situation is not dictated, but total vent locations must not exceed 36 Square inches in area, more than production venting.
6. Venting may be covered with "Frog Skin" or other like materials to prohibit snow ingestion.
7. These vents shall not be connected to airbox/plenum, or any other part of the intake system, regardless of design of the engine. (Carb or EFI)
8. All users must follow the manufacturer's approved layout of the venting and must adhere to size and location specified. No additional changes by the installer will be allowed. Manufacturers must provide instructions, template if necessary, and other info when venting is required. The manufacture can inform of this process by electronic communication.
9. Manufacturers can file only one update per model year/season.

Brake venting allowances are covered in specific brake venting rules, this is not to be construed as specific brake venting. Brake venting must be ducted to the specific location designed for cooling aid or assistance. ***SEE FRAME & BODY section#7 of FACTORY 600 RULES.***

IGNITION & ELECTRICAL

1. Ignition must be OEM for the year and model.
2. CDI/ECU module may be reprogrammed.
3. No aftermarket device allowed which interrupts ignition for launch control or traction control unless OEM for the model.
4. Instrumentation may be added but must not present a safety hazard. Instruments may be disconnected but not removed.
5. Head and taillights must be original OEM equipment for the model. Must remain in original mounting location.

Cross Country 2026 - 2027

600 PRO OPEN

GENERAL

1. Competition is open to any snowmobile either production or one-of-a-kind experimental.

ENGINE

1. Must be normally aspirated (no super/turbo charged systems allowed).
2. **Engines must originate from a stock qualified model. Engines may be interchanged between production-based engines within the brand and maybe a concept engine for development applications.**
3. All engine components may be modified.
4. Fuel injection systems are allowed.
5. No nitrous oxide systems allowed.
6. Must be silenced by use of muffler or snuffer. Must exit the bottom side of machine. Noise level cannot exceed one hundred decibels (100 dB) measured seventy-five (75) feet down the track, fifty (50) feet from the track at full throttle measured on the exhaust side of the snowmobile.

DRIVE

1. The clutch cover must be separate from cowl configuration, and cover clutches to center of bolt or below. Clutch cover must be .090-inch 6061T6 aluminum or equivalent steel material (other materials not allowed) and be covered with six (6) inch belting. If clutch cover is constructed of .125-inch aluminum or equivalent steel material, belting is recommended, not required. Snowmobiles with removable side panels may bolt clutch cover guard to side panel to meet this requirement.
2. On snowmobiles that comply, in all respects, with the Stock class rules, the stock belt guard may be used when moving up to Open class.

SKI SUSPENSION & STEERING

1. Any type of suspension may be used, factory or hand built.
2. Must have a minimum of two (2) inches of travel.
3. Handlebars must be commercially available. Ends must be capped. Handlebars must be padded. Throttle control must be operated with a thumb mechanism located on the handlebar to the rear of the machine (no twist grips).

TRACK SUSPENSION

1. Any type of suspension may be used, factory or hand built.
2. Must have a minimum of two (2) inches of travel.

TRACK & TRACTION

1. Must be one-piece molded rubber track.
2. No cleated tracks allowed.
3. No cleats or partial cleats may be added.
4. Stud backing plate max. size: 2 in. X 2 1/4 in.
5. Track clips and guide clips may be replaced when worn. Guide clips may be removed and replaced with track clips. Track clips may be removed and replaced with guide clips. The track must retain the original number of clips with which it was produced.

FRAME & BODY

1. Any factory or hand-built chassis and/or tunnel may be used. Structural integrity must be maintained. Any machine deemed unsafe or proved to be a safety hazard to any personnel will not be allowed to compete.
2. Carbide-to-carbide ski stance cannot exceed forty-five (45) inches measured under the spindle. Center to center distance will be measured as follows: On units with centered carbide on skis, carbide to carbide dimension with skis straight ahead and rider in seated position in natural contour of seat, will determine measurement. Measurement will be taken at carbide cutting edge. On units with offset carbide, outer carbide on right hand ski to outer carbide on left hand ski, with skis straight ahead and rider in seated position in natural contour of seat, will determine measurement. Measurement will be taken at carbide cutting edge as noted by location indicator gauge as the unit comes off the track
3. It is highly recommended that the sides of the rear tunnel opening be enclosed to keep a ski or driver's extremities from entering the tunnel area.
4. Snowmobile must have an OEM appearing hood and belly pan. Must enclose the same components as they do on a stock qualified snowmobile. Must be securely fastened during competition.
4. Vent openings are allowed but cannot exceed twelve (12) square inches each. No "Swiss cheese" belly pans allowed.
5. All machines must have a windshield at the start of each race day. Must extend a minimum of five (5) inches above the highest part of the cowl, hood, or console. Must have safety edging.

Cross Country 2026 - 2027

6. Seat must be a minimum of six (6) inches thick. Height is measured from the top of the tunnel to the top of seat in rider less state. Must be upholstered. Must be the same width as the tunnel, minimum, measured at the lowest part of the seat. Must be long enough to cover any exposed top tunnel material.
7. Gas tank may be located anywhere on the chassis. Must be securely fastened and shielded from heat and/or rotating components. Cannot be pressurized.

IGNITION & ELECTRICAL

1. Ignition systems may be modified.
2. **Any OEM taillight with Brake Light may be used with Brake Light Cannot be battery operated. Headlight may be removed.**
3. Glass lenses must be taped with transparent tape. No colored tape allowed.

COURSE REQUIREMENTS

GENERAL

1. The course shall be checked before the race can be started and any discrepancies found shall be correct.
2. The finish line banner must have a minimum ground clearance of ten (10) feet to the bottom of the finish line banner, and twenty-five (25) feet between supports.

COURSE MARKING

1. The course shall be marked adequately and safely.
2. Course markers must be clearly visible above the snow line. Pole or stake material should not endanger the driver when snowmobile hits a marker.
3. The distance between markers will vary with terrain, vegetation, visibility, and other obstacles. (In case of fog or blowing snow, markers should be closer together.)
4. When marking trees, limbs and other objects, the marker must be clearly visible (surveyors' tape, paper, etc.).
5. Hazard signs (minimum 100 square inches) must be used to warn drivers of an abrupt change in course (see illustration). Directional arrows should be placed to give the driver ample time to safely negotiate the hazard.
6. The signs must be orange or red with black directional arrows.
7. Hazard areas are those areas that present potential danger to drivers traveling within the range of 30 or more miles per hour.
8. Time to transfer away from X sign will contain a black "X" or double down.

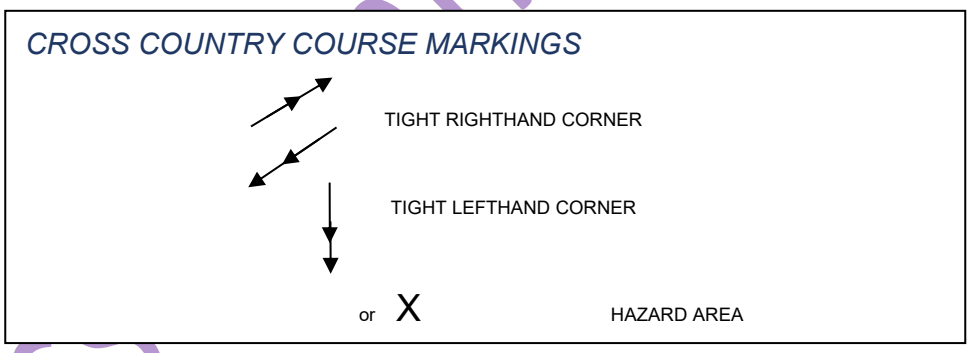

COURSE CONTROL

1. Extremely dangerous hazard areas must have a supervising official present at the danger point or be removed from the course.
2. Trail and road crossings and/or use must be conducted in compliance with state/provincial and/or local laws.
   a. All sections of a course that include a road or trail used by the public require two or more road officials to control both public and racing traffic. Their purpose is to help ensure the safety of the public and the competitors.
   b. Road officials may be either law enforcement personnel or race officials.
3. It is strongly recommended that the sanctioning body seek the assistance of the local and state/province law enforcement officials for the use of public roads and/or trails.
4. The start/finish line area and serpentine must be secured with snow fence or other appropriate barrier to keep all spectators out. Officials must control entrances to this area. (See Recommended Course Layout in APPENDIX.)
5. At no time will departing snowmobiles be let out so that one flight will overlap another flight and cause intermingling. Faster and higher performance level snowmobiles will be required to start first in the flights.

Cross Country 2026 - 2027

6. The impound area shall be located a safe distance from the finish line behind the snow fence.

CHECK POINTS

1. Check point OFFICIALS have unquestionable disqualification authority.
2. Check points serve to verify that racers are following the racecourse.
3. Check points should be placed in strategic positions that will provide maximum visual coverage of the course.
4. Drivers are not to be informed as to the number or location of checkpoints.
5. All racers are expected to have their snowmobile under control when they enter a checkpoint. They are also expected to courteously assist the checkpoint in getting validated.
6. Any driver/team that does not properly comply with check point validation procedure will be disqualified unless extenuating circumstances are verified by the check point officials and the Race Director. Extenuating circumstances may include:
   a. Racers who miss check points unintentionally.
   b. Team or driver gets lost because of damaged or missing course markers.
7. Penalties for check point and course cutting violations will vary with circumstances. The Race Director has the authority to determine such penalties. The Race Director shall confer with other race officials, observers, and others in the process of making penalty determinations.

CHECK POINT PROCEDURE

1. Each checkpoint will have two flags at the checkpoint.
   a. Yellow Flag (prepare to stop) placed ahead of the checkpoint to warn drivers to slow down.
   b. Red Flag (stop) placed at the point where the checkpoint official will be standing.
2. Alternate procedure shall be the use a stop signs at the checkpoint, controlled by a race official.
3. Each driver or team member must be clearly marked with their number for identification by checkpoint officials.
4. A driver or team will not be validated if a checkpoint official observes the entrant committing a rules infraction.
5. If a driver passes the checkpoint official before stopping, it is the driver's responsibility to return to the official. The official will not move to validate the driver.
6. Once the driver/team has been properly validated, the entrant(s) may proceed to the next checkpoint.
7. In addition to the normal validation procedure, it is suggested that driver and team numbers be written down to further verify that they have gone through the checkpoint.

SUGGESTED VALIDATION PROCEDURES

MANNED CHECK POINT

(MARKING OF HELMETS)

a. A patch of masking tape or surgical tape which will be applied to each racer's helmet before or during the drivers meeting. All taped helmets are to be checked before the start of the race to ensure that no premature marks have been applied.
b. At each checkpoint, each racer will receive a mark on his/her helmet. Each checkpoint will have their own color. (Felt tipped markers or crayons may be used.)
c. Drivers must tilt their helmet towards the checkpoint official to facilitate marking.
d. (Team) - Check point officials will mark all team members after the entire team has stopped and lined up in single file at the check point.
e. After the driver or the team has been marked, the official must yell, "GO" or slap the driver on the back or helmet to let the driver know that he has been successfully marked.

UNMANNED CHECKPOINT

(DRIVER/TEAM TOKEN IN A CAN)

a. Drivers/teams will be issued a specific number of tokens at the drivers meeting. Tokens will have the driver's/team's numbers on them.

b. Entrants are responsible for dropping one of their tokens into official containers (cans) at each checkpoint. More than one can should be used at a checkpoint to avoid traffic jams. Four or more may be required.
c. (Team) - Only one team member is required to stop and drop a token into the can.
d. If a drivers/team's token is not in the can, that team or driver may be disqualified.
e. Drivers/teams that allow other drivers/teams to drop their chips into cans will be disqualified.

Cross Country 2026 - 2027

Cross Country Junior classes

NOTICE

Parents or guardians who knowingly enter a Transition class, Junior Class, Junior I, Junior II, Junior I Sprint, Junior II Sprint, F-500 Junior I, F-500 Junior II driver who is not of the legal age to compete in the specific class, will be subject to a $500.00 fine and one year suspension.

The driver also may be given a one-year suspension.

Affiliates who through negligence or not having an approved advancement system allow drivers under the age of 18 years of age to enter adult classes with out being certified through the advancement process may be fined $500 and possible loss of affiliation rights.

Advancement Procedure.

4. No minors may enter adult classes until the age of 18, or if approved by the Advancement Procedure which is available starting at 14 years of age. You must be 16 years of to compete in a Pro class.
5. Each involved affiliate of the same discipline (example Oval Sprint) must either provide a qualification process, or declare to ISR they will observe other affiliates of the same discipline's advanced rider list. Affiliates with a qualified advancement program have the right to determine advancement of candidates as they see fit. Qualifying with one affiliate does not qualify the youth driver for all affiliates.
6. Affiliates may honor another affiliates advancement. Driver must present copies of the advancement prior to registration.

AFFILIATE RESPONSIBILITIES

5. **Before an affiliated sanctioning body may advance Junior drivers, it must have a bona fide junior program. The affiliate's Junior Competition committee /Representative is responsible for verifying a Junior's driving ability.**
6. **Junior competitors shall be required to perform practice laps/runs from time to time to allow race officials to observe their progress in learning the handling skills required to advance.**
7. **Junior advancement is at the discretion of the driver's classification committee and can be reviewed at any time. The committee has the authority to advance, demote or deny advancement to any driver. The decisions of the classification committee are final.**
8. **The affiliate board/driver classification committee will not advance drivers until all DRIVER/PARENTAL RESPONSIBILITIES have been fulfilled and all completed and signed documents are on file.**

DRIVER / PARENTAL RESPONSIBILITIES

WHEN AN ISR COMPETITOR REACHES THE AGE OF 14 YEARS AND QUALIFIES FOR JUNIOR COMPETITION, HE/SHE MAY BE ADVANCED UP TO THE NEXT LEVEL, BUT ONLY AFTER FULLFILLING ALL REQUIREMENTS BELOW:

(SEE ADVANCEMENT FLOW CHART FOR SPECIFIC CLASSES IN JUNIOR COMPETITION SECTION).

8. **A Junior competitor must compete in at least one entire event in a given class before becoming eligible for advancement.**
9. **Before a Junior may advance to a senior class, he/she must meet the Junior advancement requirements established by the affiliate's board/driver advancement committee.**
10. **He/she must petition the affiliate's board, in writing, requesting that he/she be allowed to advance.**
11. **The request for advancement must be accompanied by all new consent and release forms (as specified above).**
12. **The request must be approved in writing by the affiliate board to advance.**
13. **Before advancing to a Pro Division class, the Junior must be at least 16 years of age.**
14. **Parents may request for their child to stay in a lower class if they feel the driver needs more experience to develop track and driving skills.**

For Advancement application click here.

Cross Country 2026 - 2027

ISR is continually working on programs for Junior Classes. These classes will utilize throttle blocks and other restrictions to allow a 600-platform sled to be used in the Junior Division. Additional restrictions may be added at any time.

Junior 10-13
600 cc limited sleds with 50% throttle block and exhaust valve closed.
Junior 10-13 Girls
600 cc limited sleds with 50% throttle block and exhaust valve closed.
TRANSITION 8-12 & 13-17

SPECIAL NOTICE

ALL SLEDS UTILIZED IN THIS CLASS MUST BE NON-CURRENT, OR A MINIUMN OF (1) ONE MODEL YEAR OLD.

The rules committee may at any time during the racing season, review the restrictions of the designated models if a brand is dominating the class.

The following parameters must be adhered to:
1. This class is to be run as the only class on the racetrack. Designated sleds may be ran together.
2. The class is for drivers that are 8 years old and not yet 13 years old. (It is not open to younger or older drivers.)
3. The class is for drivers that are 13 years old and not yet 18 years old. (It is not open to younger or older drivers.)
4. The snowmobile models eligible must be designated by ISR and the Rules Committee.

Stock legal production 600 cc Super Stock race snowmobiles will be the format for Transition classes. These sleds will be developed with specific manufacturer-based modifications and restrictions. The snowmobiles will be raced as produced with only the following changes.

1. This class will follow all the rules for the stock-based snow cross class.

2. Electronic control unit ECU will be reprogrammed with rev limit restrictions (rev limited to maximum 6000 RPM) 2. Electronic control unit ECU will be reprogrammed with rev limit restrictions (rev limited to maximum 6500 RPM) (Exception Polaris sleds can be 6600 RPM)

3. Restricted throttle kit not to allow more than 50% throttle opening must be installed designated throttle kit part numbers will be supplied by brand.

4. The exhaust valves will be blocked in the shut position.

5. Primary clutch engagement will be 4000 Max RPM. (Exception Polaris sleds can be 4100 RPM) (measured with secondary Sheave movement)

6. Rider, running board blocks can be used.

7**.** Programmable Tethers**:** Also, effective 1/3/2020 no competitor or mechanics in the transition class are allowed to possess a tether that is not programmed for the transition class when they are between their trailer-staging-racetrack-podium during any transition events or practice. If you are found with a non transition programed tether it is grounds for a DQ.

SLED CRITERIA

Junior 14-17 Girls

Legal sleds 600 Limited class sleds with 50% throttle block.

JUNIOR 14-17

Legal sleds 600 Limited class sleds with 50% throttle block.

120/200 CLASSES

The intent of these classes is to establish races in which all can compete at their level of personal and equipment ability. The class

structure is organized in such a way as to enable as many snowmobiles as possible a place to successfully compete.

If class rules are not followed, the class name shall not be used, and the class shall be run as a specialty class with ISR's prior approval.

Once rules are abridged, the sanction is no longer in effect.

All 120/200 4 Stroke classes are stock based classes. No change or modification is allowed unless specifically allowed by these rules. If these rules do not specifically allow a change or modification, then it must be assumed that the change or modification is not allowed.

ELIGIBLE DRIVERS

Stock 120: These are classes for 4-12-year-old drivers.

Champ 120: These are classes for drivers aged 6-12. All other technical rules apply.

Cross Country 2026 - 2027

At times, regional or national rules may apply, but in any case, competitors will not be younger than 4 years of age.

ELIGIBILE SNOWMOBILES

Arctic Cat Z 120, Z 120 Sno Pro
Bombardier Mini Z
Polaris XCR 120
Yamaha SRX 120
200 ZR
200 SNOSCOOT
200 MXZ

SNOW CROSS DIVISIONS

Speed Limited Snow Cross
Snow Cross Stock
Improved
Champ 120

REGIONAL SPECIALTY CLASSES

Open 206

1. The 206 Local Option OPEN 206 class combines the rules for Champ.
2. Chassis and Drive with a spec engine rule. All chassis rules are the same as Champ 120.

200 CLASSES

200 STOCK
200 IMPROVED

1. Can be any 120/200/ 4 racing event that does not fall under any of the specific circuits or classes but meets established ISR safety standards and qualifies for ISR insurance coverage.
2. All specialty classes must be approved by ISR and the Race Rules Committee.

GENERAL COMPETITION AND SAFETY

1. If a driver is off his/her sled after an accident involving two or more sleds, the race will be red flagged.
2. Driver entry into an event is open to any qualified individual. The sanctioning body has the authority to evaluate all drivers to determine their qualifications.
3. A driver must compete for a full year in Stock 120/4 Class or in Kitty Cat racing and be six years of age before competing in any of the other 120/4 classes.
4. In Champ classes, drivers must have at least one-year experience in 120/4 classes and be at least 7 years old through 14 years old. Drivers who attain the age of 15 during the scheduled season may complete the season.
5. Drivers must not reach the age of 15 prior to published scheduled race season for the affiliate.
6. Both the owner and driver are responsible to ensure that their snowmobile and driver safety equipment conform to all the rules for the class in which they have entered. The applicable rules are published in the chapter, in the GENERAL RULES AND REGULATINS section and from time to time, in ISR bulletins. Any driver that does not meet the requirements listed will be subject to disqualification and forfeiture of any prizes or awards, plus eligibility for the next two (2) races.
7. Two (2) laps are recommended in heats and five (5) laps in the final heats. Regional variations to lap counts allowed.
8. For restarts, the Snowmobiles will be arranged in a staggered line at a 45° angle to the track starting from left and going to the right.
9. Mandatory tech inspection of first place sleds.
10. The Race Director and/or Tech Director have the authority to determine structural integrity.
11. While driver is on course no radio communication between driver and crew is allowed.

Cross Country 2026 - 2027

MANDATORY DRIVER SAFETY EQUIPMENT

1. Helmets, upper body protection, shin guards, and above the ankle boots are required in all classes.
2. Mouth guards are mandatory in Sno-Cross and any other race over uneven terrain. Mouth guards must remain in place for the duration of the race.
3. See GENERAL RULES AND REGULATIONS, DRIVER SAFETY EQUIPMENT for details.

ENTRY FEES, PRIZES AND AWARDS

1. Recommended entry fees in 120/4 Racing/ 200 Racing - $15.00 in all classes.
2. Recommended awards – Trophies only (no prize money.)
3.

GENERAL SNOWMOBILE RULES

1. No traction products allowed.
2. Guide clips and/or track clips may be added to the track.
3. Carbide ski runners allowed.
4. Left side of handlebar may be straightened. Structural integrity must be maintained.
5. An extension may be added to the left handlebar (see illustration.) Maximum 3 inches wider, maximum 4 inches down. End must be capped.
6. Any separate front bumpers that extend away from the body must be padded.
7. In all oval and Ice Lemans classes, the rear of the tunnel must be enclosed with material comparable in strength to 0.063 aluminum sheet. The tunnel enclosure is required to reduce the possibility of skis and driver's extremities entering the tunnel area. The shaded area (see illustration) must be enclosed. The enclosure shall cover the rear and both sides and extend forward. The bottom of the enclosure shall be no higher than one (1) inch above the center of the rear axle (with the driver in place.) The rear of the enclosure shall be no further than 2.5 inches from the rear of the track.

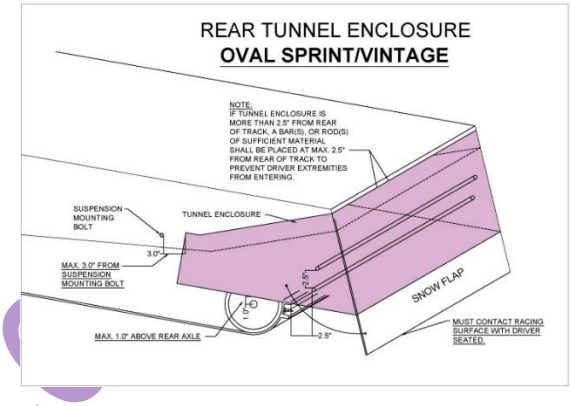

8. Slide rail lubrication systems may be allowed, depending upon local, state, and/or federal laws and must utilize non-toxic and biodegradable lubricants.
9. Use of Heli-Coils are allowed in OEM location only.
10. In Stock and Improved Stock, snowmobile performance will be monitored and IKCR Rules Committee may adopt rules changes to insure fair competition among the various models.
11. All metal ski hoops must be padded.
12. On board slide rail lubrication systems allowed in all classes, depending upon local, state, and/or federal laws, lubrication must be non-toxic and biodegradable. Pulse line may be added to engine for slide lube pump purposes.
13. A tachometer may be installed.
14. Data acquisition and data acquisition systems allowed.
    Taillight required.

STOCK CLASS

GENERAL

1. The snowmobile must have original OEM for the model engine, hood, track, frame, seat, cowl, gas tank, carburetion, air-box, suspension, and clutch supplied by the manufacturer for the model. Named components must be OEM for the model and year. Or properly filed OEM replacement parts that supersede the original OEM parts. Factory options are not allowed.

Cross Country 2026 - 2027

2. Engine RPM and vehicle speed may be monitored at the discretion of the Race Director.

ENGINE

1. Unless otherwise stipulated in this section, all governor linkage must be intact, in place and functional. Any governor spring may be used. Governor gear may be removed.
2. Replacing chain tensioner with commercially available aftermarket tensioner is allowed.
3. No component of the engine (included head, valves, and cam) may be altered, changed, or enlarged from the engine manufacturer's original stock specifications nor may any additional components be added to the engine.
4. Maximum cylinder bore for wear or cylinder repair cannot exceed .020 inches (.50MM)
5. Stock OEM Pistons up .020 (.50MM) 0nly are allowed for replacement.
6. Blueprinting of engines is not allowed. No removal material whatsoever will be allowed. This is to include polishing, port matching, deburring, glass or sand blasting surfaces or material removal for engine balancing or other reasons.
7. No changes in engine dimensions can be made by gasket adjustments.
8. Spark plugs do not necessarily have to be OEM stock. Sparkplugs may not be machined to seat deeper in the head, plug gaskets may not be altered, and plug indexing is not allowed.
9. No carburetor/air silencer changes allowed. Filter material may be added or removed.
10. Jetting changes are allowed.
11. Remote adjustable main jet system allowed.
12. Exhaust must be OEM as produced for the model. The OEM exhaust system must be used in its entirety. No internal or external modifications allowed. No welding allowed, even for repair. Muffler components and/or silencing material must be intact always.
13. To equalize performance between the manufacturer's' models the following changes are allowed.

a. Ski-Doo racers can change valve springs t Honda P/N 14751-ZE1-000
b. Arctic Cat 120 racers can upgrade to the 120 SnoPro kit consisting of valve springs and cam. (Spring number 129-21-90700). The kit must be used in its entirety.
c. 2010 to current Arctic cat with Yamaha engines and Yamaha SRX 120 models can upgrade to the Yamaha/Arctic Cat performance kit consisting of camshaft, and valve springs, in conjunction with ISR Bulletin 12/13-009.

Valve Spring Criteria

A.

		Valve Spring Dimensions	
	Wire Dia.		Max. Free Lght
Ski Doo	.078+-.002	.	35.00 MM
A C 2009<	.090+-.002		35.50 MM
AC/2010	.078+-.002		26.60 MM
Polaris	.090+-.002		30.50 MM

	Seated hgt	Open hgt	Seated press.	Open press.
Ski Doo	0.875	0.613	20 lb.	25 lb.
Arctic Cat	0.955	0.735	26 lb.	35 lb.
AC 2009<	0.574	0.574	20 lb.	24 lb.
AC 2010	0.678	0.678	15 lb.	21 lb.
Polaris	0.850	0.625	27 lb.	38 lb.

B.

Accuracy of this test will be based on the tester used and the measuring tool used for checking heights.

14. Polaris part # 0681-545 valve guide may be used on Arctic Cat 120 models. Valve guide may be shortened to the valve guide specifications for the Suzuki engine only.

SPECIAL NOTICE

ENGINE REV LIMITERS will be imposed on all Stock and IMPROVED STOCK 120 class snowmobiles to equalize performance levels between all brands.

To enhance the durability of the Honda GX120 engine used in production Ski Doo Mini 120 and Mini-Rev Snowmobile, a valve "rotator" Ski Doo part number H14781-ZE1-000 may be fitted on the intake valve.

Cross Country 2026 - 2027

DRIVE

1. Brake must be functional and operational always.
2. Clutch may be replaced with aftermarket clutch of the same basic centrifugal design. Clutch may be replaced with aftermarket clutch of the same basic centrifugal design. Disc style drive clutches are not legal because they are not the same centrifugal design. (No variable ratio systems allowed.
3. Stock drive clutch engagement must be maintained.
4. No belt drives allowed.
5. Chain guard must be in place.
6. Sprocket ratio changes may be required by circuits to equalize performance between the various models.
7. 120 Sno X class Polaris gearing 420 ratio which is Stock for the sled. All Cat, Yam and Ski doo allowed to run 410 gear ratios. This can be achieved with #35 chain or #40/420 chain, tooth count on sprockets must equal ratio required.
8. Chain tensioner may be replaced with commercially available aftermarket tensioner.
9. Number 40/420 Drive chains allowed.

ISR Stock Class Gearing Info for #35 chain and Sprockets

4.10 ratio for Arctic Cat, Yamaha, and Skidoo 120 and 4.20 ratio on Polaris 120 cannot be achieved with #35 chain sprocket combinations.

Listed are the only legal #35 chain sprockets combinations.

4.10 ratio will be 12- 50, 13-54, 14-58

4.20 ratio will be 12-51, 13-55

Or go to OEM chain.

SKI SUSPENSION & STEERING

1. Front suspension must be OEM for the model.
2. Front suspension must remain in its stock location.
3. Ski widening devices are not allowed in Stock classes unless.
   furnished as OEM and properly filed.
4. Suspension travel may be limited by means of tie down only. Suspension travel must be maintained. No rigid suspensions allowed.
5. Ski-Doo Mini z can modify the rubber front suspension pucks.

SKIS & SKI RUNNERS

1. Ski must be OEM for the model and year or a commercially available aftermarket ski with a minimum overall length of 20 inches.
2. Ski suspension components must be OEM.
3. Ski loops must be added. Minimum 1-inch wide, minimum 5/16-inch-thick material must be used. Loop must have minimum diameter of 3 inches. (Nonmetallic loops only) Non-Metallic is defined as: UHMW, Nylon, Acetyl/Delrin type polymer materials only. If metallic loops are used refer to General Snowmobile rules sections for description and clarification.

TRACK SUSPENSION

1. The complete suspension must be used as furnished and filed by the manufacturer. No options allowed. Shocks must be OEM for the model. OEM for the model suspension mounting points must be used.
2. Seals may be removed from bearings in bogie wheels, rear idler wheels and/or rear idler sprockets.
3. Commercially available marginal snow wheels may be added to the slide rails. (Rear axle idler wheels must remain OEM for the model.)
4. Suspension travel may be limited by means of limit straps only. Suspension travel must be maintained. No rigid suspensions allowed.
5. Sno-cross and other rough terrain races – Stock 120/4 stroke rules apply with the exception that commercially available OEM or aftermarket shocks and springs allowed.
6. If the unit did not come with a rear shock, you are allowed a shock upgrade kit for the rear suspension.

TRACK & TRACTION

1. Any commercially available molded rubber track may be used.
   Track must fit within frame and suspension without modification to frame, or suspension. Track drivers matching the pitch of the track may be used. Track must be used as produced by the molder. Any hyfax allowed.

2. The OEM fixed upper carrier idlers may be reduced in dimension by 3/8 (.375) from the original for the model filed spec.
3. Track clips (guide clips) may added.

Cross Country 2026 - 2027

FOR TERRAIN, CROSS COUNTRY AND LEMANS RACING ONLY:

1. Specialized traction.
   a. Maximum of two points per track segment.
   b. No studs on outside belts.
   c. Studs must be unsharpened insert carbine only.
   d. Refer to Snow Cross traction rules for placement and type of stud.

IGNITION & ELECTRICAL

1. An ignition tether switch must be installed and functional.
2. Headlight and taillights must be OEM for the model.
3. OEM taillight must be operational /illuminated in its stock configuration.
4. An additional taillight must be illuminated as all times while on the racing surface.
5. Ignition and lighting systems must be OEM for the model. No modifications allowed.

FRAME & BODY

1. OEM hood must be maintained without modification. Hood may be painted any color except in Oval and Sno-cross, where orange on the snowmobile is not allowed.
2. Windshield may be removed, modified, or replaced. Windshield must have safety trim.
3. All sharp edges must be padded.
   Welding for repair will be allowed on the chassis. The repair must not alter the general design concept of the component or chassis.

IMPROVED STOCK

GENERAL

1. Snowmobile must conform to Stock class rules unless stated otherwise in this section.

DRIVE

1. Gear ratio may be changed.
2. #35 chain may be used.
3. Clutch may be replaced with aftermarket clutch of the same basic centrifugal design. Disc style drive clutches are not legal because they are not the same centrifugal design. (No variable ratio systems allowed.)
4. Brake band may be changed to fit clutch.

CHAMP CLASS

GENERAL

1. Modifications allowed in other 120/4-stroke classes are allowed in Champ.

ENGINE

1. Any OEM 120 engine allowed. Modification and/or replacement of parts is limited to items listed in this section.
2. Engine components allowed for modification or change from OEM.
   a. Cam shaft – maximum .290 Inch Valve lift
   b. Valves and seats, and guides.

- Maximum intake valve diameter 25.2mm
- Maximum exhaust valve diameter 24.2mm
- Minim valve stem diameter 5.5mm (+- .15mm)

   c. Valve springs and retainers
   d. Tappets and push rods
   e. Governors may be removed.
   f. Connecting rod.
   g. Carburetor insulator block may be modified but must maintain stock thickness dimension.
   h. Rocker Arm Pivot Studs and pivots.

Engine overbore may not exceed .020” (0.50mm) of standard bore size for the model.

Cross Country 2026 - 2027

3. Engine stroke must be stock as manufacturers filed specifications.
4. Engine components allowed to be modified but must begin as OEM for engine model.
   a. Bearings
   b. Crankshaft
   c. Piston and rings
   d. Gaskets
   e. Cylinder head and intake manifold
   f. Cylinder
   g. Crankcase
   h. Rocker arms
   i. Intake Manifold
   j. Fan Shroud
   k. Carburetor insulator block may be modified but must maintain stock thickness dimension.
   l. Rocker Arm Stud
5. Carburetor may be bored and modified, bust must begin as OEM supplied for the engine's model. A velocity Stack may be added to the intake side of carburetor.
6. A snowmobile type diaphragm fuel pump may be added. A pulse fitting may be added to the intake tract to be used to operate the diaphragm fuel pump.
7. The exhaust system may be modified or replaced. The exhaust system must be functionally silenced. The following minimum standards for straight-thru silencers are required:
   a. Inner pipe must have at least 15 holes per square inch. Minimum hole size 1/6 in. (Minim 3/8 in. sound absorbing material around the entire circumference of inner pipe).
   b. Inner pipe (perforated core) must contact sound absorbing material (fiber or steel wool packing).
   c. Outer pipe must be at least ¾ inch larger than inner pipe.
   d. Minimum silencer length 3 inches.
8. Outlet pipe must point downward and cannot protrude beyond machine width.
9. Removal of recoil mechanism and starter cup to use 12-volt remote electric starter is allowed. The recoil cover must be maintained. A 1.5-inch hole may be drilled in recoil cover to insert starter drive.
10. Valve cover may be modified to stabilize rocker arm stud. Stud girdles may be added. Breather fitting may also be added.

DRIVE

1. Clutching in open. CVT type transmission allowed. Drive components must be commercially available.
2. A metal clutch/chain cover must be in place always during operation. It must cover clutches, gears, belts, chains, starter cups, and any other rotating components.
3. Brakes must be properly operable always.
4. Track drive sprockets may be modified or changed.
5. Jackshaft allowed.

SKI SUSPENSION AND STEERING

1. Ski suspension and steering may be changed or modified. Materials and components must meet or exceed OEM strength and structural integrity. Must maintain suspension travel with driver seated. No rigid suspensions.
2. The structural integrity of the steering and suspension systems must be maintained.
3. Maximum ski stance is 34 inches (measured between ski runner cutting edges)

SKI AND SKI RUNNER

1. Skis may be changed to commercially available aftermarket skis.
   a. Minimum length for Sno-cross is 20 inches.
2. Ski loop must conform to GENERAL RULES AND REGULATIONS.
3. Ski runners must meet competition and safety requirements for the type of racing (i.e., Oval or Sno-cross).

TRACK SUSPENSION

1. Track suspension may be altered, relocated, or replaced. Structural integrity must be maintained.
2. Suspension must maintain a minimum of 2 inches of useable, vertical travel with the driver seated.
3. Track and track suspension must fit and be mounted within the confines of the tunnel.
4. Slide rail lubrication systems may be allowed, depending upon local, state, and/or federal laws and must utilize non=toxic and biodegradable lubricants.

Cross Country 2026 - 2027

TRACK AND TRACTION

1. Track must conform to Stock class rules.
2. Track may not be reversed.
3. Traction control devices must conform to rules in Stock class.

FRAME AND BODY

1. Snowmobile length must not exceed OEM for the model length by more than 2 inches (ski loop to rear of tunnel).
2. Overall body width must be within 2 inches of OEM for the model body width.
3. Bumpers must be padded (no sharp edges exposed).
4. Snow flap must be touching ice with driver aboard.
5. Belly pan and hood may be replaced. Belly pan and hood are required components.
6. Bulkhead may be modified or replaced: it must remain within 1 inch of the length and 1 inch of the width of the OEM bulkhead.
7. Tunnel may be modified or replaced using aluminum material.
8. only. Material must be a minimum of .062" thick.

IGNITION & ELECTRICAL

1. Ignition coil must be OEM for model. Flywheel must be replaced with an aftermarket billet aluminum flywheel designed for the application. Lighting coil may be removed.
2. Taillight must be illuminated always while on the racing surface, whether the engine is running or not.

SEMI PRO 206

GENERAL

1. The 206 Local Option Semi Pro class combines the rules for Stock Chassis and Drive with a spec engine rule. All chassis rules are the same as 120 STOCK CLASS.
2. Snowmobile must be an ISR designated 120/4-stroke model that complies with the GENERAL RULES AND REULATIONS section.
3. Unless otherwise specified, 120/4 Stroke Stock rules apply.
4. Externally adjustable main jet allowed.
5. Final drive track drivers can be replaced. OEM number of teeth must be maintained.

AGE LIMITS

1. Competitors must be 6 years of age.

ENGINE

Refer to LO 206 ENGINE SECTION

DRIVE

1. Stock 120/4 stroke rules apply.
2. 10/32 gear sets will be allowed.
3. Final drive shaft may be changed but must be same material type (steel to steel) and bearing dimension as OEM.

SKI SUSPENSION AND STEERING

1. Sno-cross and other rough terrain races – Stock 120/4 stroke rules apply with the exception that commercially available OEM or aftermarket shocks and springs allowed.
2. If the unit did not come with a rear shock, you are allowed a shock upgrade kit for the rear suspension.

Cross Country 2026 - 2027

PRO 206

GENERAL

1. The 206 Local Option Pro class combines the rules for 120 racing with a spec engine rule. All chassis rules are the same as 120 STOCK CLASS**.**
2. Snowmobile must be an ISR designated 120/4-stroke model that complies with the GENERAL RULES AND REGULATIONS section.
3. Unless otherwise specified, 120/4 Stroke Stock rules apply.
4. Externally adjustable main jets allowed.
5. Final drive track drivers can be replaced. OEM number of teeth and diameter must be maintained.

AGE LIMITS

1. Competitors must be 7 years of age. Drivers reaching 14 years of age during the season may finish the season in that class.

ENGINE

Refer to LO 206 ENGINE SECTION

DRIVE

1. Gear ratio may be changed.
2. #35 chain may be used.
3. Clutch may be replaced with aftermarket clutch of the same basic centrifugal design. Disc style drive clutches are not legal because they are not the same centrifugal design. (No variable ratio systems allowed.)
4. Brake band may be changed to fit clutch.

SKI SUSPENSION AND STEERING

1. Sno-cross and other rough terrain races – Stock 120/4 stroke rules apply with the exception that commercially available OEM or aftermarket shocks and springs allowed.

5. If the unit did not come with a rear shock, you are allowed a shock upgrade kit for the rear suspension.

SPEED LIMITED CLASSES

GENERAL

1. This is an alternative means of conducting 120/4 stroke races that required that all competitors govern the speed of their snowmobiles according to the class rules.
2. A test course should be provided which will allow competitors to check the maximum speed of their sled before the event. (It is recommended that the speed be displayed on a large visual display.)
3. A radar gun or other device will be used at the fastest portion of the track during the races. (It is recommended that the speed be displayed on a large visual display.)
4. Recommended classes:
   Class One - 15 mph, Drivers aged 4 through 5. Class Two - 18 mph, Drivers aged 6 through 12.
5. There must be no class speed more than 18 mph.
6. To ensure safe competition, the Race Director must evaluate the course and the class speed limits and make changes, as necessary.
7. Violators of the class speed limit will be reclassified to last place finishing position.
8. Driver safety equipment, sled equipment and course requirements from the 120/4 STROKE RACING section apply.
9. A snowmobile and driver safety inspection will be conducted before racing. Post-race technical inspection will be conducted in the event of a protest only.

Cross Country 2026 - 2027

200 DIVISION

SNOWMOBILE REQUIREMENTS

1. Snowmobiles must conform to the rules of the Improved Stock Class for 120/4 Stroke Racing.

COURSE REQUIREMENTS

The intent of these classes is to establish races in which all can compete at their level of personal and equipment ability. The class structure is organized in such a way as to enable as many snowmobiles as possible a place to successfully compete.

If class rules are not followed, the class name shall not be used, and the class shall be run as a specialty class with ISR's prior approval.

Once rules are abridged, the sanction is no longer in effect.

All 200 DIVISION classes are stock based classes. No change or modification is allowed unless specifically allowed by these rules. If these rules do not specifically allow a change or modification, then it must be assumed that the change or modification is not allowed.

ELIGIBILE SNOWMOBILES

Arctic Cat ZR 200
Ski Doo MXZ 200
Yamaha Sno-Scoot

200 STOCK

Stock
Improved Stock

1. The snowmobile must have original OEM for the model engine, hood, track, frame, seat, cowl, gas tank, carburetion, air-box, suspension, and clutch supplied by the manufacturer for the model. Named components must be OEM for the model and year. Or properly filed OEM replacement parts that supersede the original OEM parts. Factory options are not allowed.
3. Engine RPM and vehicle speed may be monitored at the discretion of the Race Director.

ENGINE

1. Unless otherwise stipulated in this section, all governor linkage must be intact, in place and functional. Factory 6000 rpm rev limiter must be intact and functional.
2. No component of the engine (included head, valves, and cam) may be altered, changed, or enlarged from the engine manufacturer's original stock specifications nor may any additional components be added to the engine
3. Maximum cylinder bore for wear or cylinder repair cannot exceed .020 inches (.50MM
4. Stock OEM Pistons up .020 (.50MM) 0nly are allowed for replacement.
5. Blueprinting of engines is not allowed. No removal material whatsoever will be allowed. This is to include polishing, port matching, deburring, glass or sand blasting surfaces or material removal for engine balancing or other reasons.
6. No changes in engine dimensions can be made by gasket adjustments.
7. Spark plugs do not necessarily have to be OEM stock. Sparkplugs may not be machined to seat deeper in the head, plug gaskets may not be altered, and plug indexing is not allowed.
8. No carburetor/air silencer changes allowed. Filter material may be added or removed.
9. Jetting changes are allowed.
10. Remote adjustable main jet system allowed.
11. Exhaust must be OEM as produced for the model. The OEM exhaust system must be used in its entirety. No internal or external modifications allowed. No welding allowed, even for repair. Muffler components and/or silencing material must be intact always.

Cross Country 2026 - 2027

DRIVE

1. Brake must be functional and operational always.
2. Stock drive clutch engagement must be maintained. OEM drive clutch rollers and spring must be stock, with no modifications. Driven clutch spring and helix must be OEM. Roller and spring specs will be placed here. No Shimming of primary cover or spring allowed.
3. All guards and shields must be in place.
4. Final drive system must remain as produced. OEM 2.95:1 gear ratio must be maintained, no gear ratio changes allowed.

SKI SUSPENSION & STEERING

1. Front suspension must be OEM for the model.

2. Front suspension must remain in its stock location.
3. Ski widening devices are not allowed in Stock classes unless furnished as OEM and properly filed.

3. Suspension travel may not be altered.

SKIS & SKI RUNNERS

1. The only skis that may be used will be Arctic Part # and Yamaha part #
2. Ski suspension components must be OEM.
3. All Ski loops must be at least 1 inch wide and 5/8-inch-thick or one-inch diameter round material. Foam may be added to achieve the 1-inch dimension. Refer to General Snowmobile rules sections for description and clarification.
4. Carbide wear bars may be added.

TRACK SUSPENSION

1. The complete suspension must be used as furnished and filed by the manufacturer. Shocks must be OEM for the model. OEM for the model suspension mounting points must be used.
2. OEM available marginal snow wheels may be added to the slide rails. (Rear axle idler wheels must remain OEM for the model.)
3. Suspension travel may not be altered.

TRACK & TRACTION

1. OEM track must be used as produced.
2. No carbon fiber backers or titanium traction products allowed.
3. Tunnel protectors may be added.
4. In oval applications slide lubers may be added.
5. Track clips may be added.

FOR TERRAIN, CROSS COUNTRY AND LEMANS RACING ONLY:

1. *Specialized traction.*
   - *a. Maximum of two points per track segment.*
   - *e. No studs on outside belts.*
   - *f. Studs must be unsharpened steel or insert carbide only.*
   - *g. Screw traction components may be used in lieu studs.*
   - *h. Refer to Snow Cross traction rules for placement and type of stud.*

IGNITION & ELECTRICAL

1. An ignition tether switch must be installed and functional.
2. Headlight and taillights must be OEM for the model.
3. OEM taillight must be operational /illuminated in its stock configuration.
4. Ignition and lighting systems must be OEM for the model. No modifications allowed.

FRAME & BODY

Cross Country 2026 - 2027

1. OEM hood must be maintained without modification. Hood may be painted any color except in Oval and Sno-cross, where orange on the snowmobile is not allowed.
2. Windshield may be removed, modified, or replaced. Windshield must have safety trim.
3. All sharp edges must be padded.
4. Welding for repair will be allowed on the chassis. The repair must not alter the general design concept of the component or chassis.

200 IMPROVED

GENERAL

1. Snowmobile must conform to Stock class rules unless stated otherwise in this section.

ENGINE

1. OEM 6000 rpm rev limiter must be used. Yamaha OEM engine upgrade kit (head and carb) will be allowed. ENGINE UPDATE KIT PART#
2. Performance Kit is the same for both Arctic Yamaha and Ski-doo models. All components supplied must be used.

SKIS AND SKI RUNNERS

1. Ski must be OEM for the model and year or a commercially available aftermarket ski with a minimum overall length of 20 inches.

SKI SUSPENSION & STEERING

1. OEM Front suspension shocks may be replaced with commercially available aftermarket.
2. Front suspension must remain in its stock location.
3. Commercially available ski widening devices will be allowed. (One off setups not allowed)
4. Front suspension widening achieved when using the approved performance kits is allowed.
5. Suspension travel may be altered. Suspension travel may be limited by means of tie down only. 1 inch of suspension travel must be maintained. No rigid suspensions allowed (suspension linkage or chassis flex is not considered travel)

5. Steering column location may be altered but must retain lower OEM mounting point.

6 . Steering column may be shortened no more than 4 inches. Steering column if shortened must be slugged and capture welded.

7. Existing steering column may be bent forward or rearward up to 3 inches from stock location, above the upper pivot mount.

TRACK SUSPENSION

1. The complete suspension must be used as furnished and filed by the manufacturer. OEM suspension shocks may be replaced with commercially available aftermarket. Spring spacers may be used to increase pressure on torsion springs OEM for the model suspension mounting points must be used.
2. Seals may be removed from bearings in bogie wheels, rear idler wheels and/or rear idler sprockets.
3. Commercially available marginal snow wheels may be added to the slide rails. (Rear axle idler wheels must remain OEM for the model.)
4. Suspension travel may be altered. may be limited by means of limit straps only. Suspension travel must maintain 1 inch of travel. (Suspension linkage or chassis flex is not considered travel.

No rigid suspensions allowed.

DRIVE

1. Gear ratio may be changed, by using any commercially available chain sprocket kit or commercially available OEM belt style pulleys.
2. OEM primary and secondary clutch and belt must be used. Primary rollers and spring along with secondary spring maybe changed using commercially available parts only. Secondary helix must remain stock from OEM with no modifications.
3. Chain case/ gear/ pulley case must use a protective cover to keep drivers' extremities from contacting drive system.

Cross Country 2026 - 2027

SPECIALTY CLASSES

F-200 BRIGGS, IMPROVED 200 WITH 206 MOD ENGINE PACKAGE

NOTICE THIS RULE SET IS IN DEVELOPMENT STAGE AND MAY HAVE CHANGES IMPLEMENTED DURING THE SEASON, TO EQUALIZE, LOWER, OR IMPROVE THE PERFORMANCE LEVEL.

GENERAL

1. Snowmobile must conform to Stock class rules unless stated otherwise in this section.

The engine package for this rule set is a 206 derived base Briggs engine with certain allowable modifications.

Due to the nature of this class, the engine is a completely tech-able item. Thorough engine examination is recommended to all affiliate's tech staff.

Competitors/Builders if you do not wish to perform engine teardowns after an event do not enter this class.

1. Only allowable engine package shall be the Briggs approved 206 variants.

Clarification:

This is a spec engine class and must only utilize the engine internal components specified in the build sheet. A World Formula Briggs engine is not allowed. The engine is derived from a 206 Briggs engine.

2. The engine components are required to be the designated components supplied by Briggs and may not be altered except as directed in the supplied engine rules**.**

LINK HERE FOR Briggs rules for this engine package.

SKIS AND SKI RUNNERS

1. Ski must be OEM for the model and year or a commercially available aftermarket ski with a minimum overall length of 20 inches.

SKI SUSPENSION & STEERING

1. OEM Front suspension shocks may be replaced with commercially available aftermarket.
2. Front suspension must remain in its stock location.
3. Commercially available ski widening devices will be allowed. (no one off setups not allowed)
4. Front suspension widening achieved when using the approved performance kits is allowed.
5. Suspension travel may be altered. Suspension travel may be limited by means of tie down only. 1 inch of suspension travel must be maintained. No rigid suspensions allowed (suspension linkage or chassis flex is not considered travel)
5. Steering column location may be altered but must retain lower OEM mounting point.
6. Steering column may be shortened no more than 4 inches. Steering column if shortened must be slugged and capture welded.
7. Existing steering column may be bent forward or rearward up to 3 inches from stock location, above the upper pivot mount.

TRACK SUSPENSION

1. The complete suspension must be used as furnished and filed by the manufacturer. OEM suspension shocks may be replaced with commercially available aftermarket. Spring spacers may be used to increase pressure on torsion springs OEM for the model suspension mounting points must be used.
2. Seals may be removed from bearings in bogie wheels, rear idler wheels and/or rear idler sprockets.

Cross Country 2026-27

3. Commercially available marginal snow wheels may be added to the slide rails. (Rear axle idler wheels must remain OEM for the model.)

4. Suspension travel may be altered. may be limited by means of limit straps only. Suspension travel must maintain 1 inch of travel. (Suspension linkage or chassis flex is not considered travel.

No rigid suspensions allowed.

DRIVE

1. Gear ratio may be changed, by using any commercially available chain sprocket kit or commercially available OEM belt style pulleys.
2. OEM primary and secondary clutch and belt must be used. Primary rollers and spring along with secondary spring maybe changed using commercially available parts only. Secondary helix must remain stock from OEM with no modifications.
3. Chain case/ gear/ pulley case must use a protective cover to keep drivers' extremities from contacting drive system.

KC PRO SPECIALTY CLASS

WORLD FORMULA CHAMP

Sleds eligible for class are 120-200 sized Chassis.

NOTICE

Due to the experimental nature of this class and in its initial years of competition, restrictions may be imposed at any time if safety standards are compromised.

Age of Competition

1. Competitors must be 7 years of age with one year of driving experience. Drivers reaching 14 years of age during the season may finish the season in that class.

ENGINE

1. Only allowable engine package shall be the Briggs approved 206 variants.

Clarification:

The engine package for this rule set is a 206 derived base Briggs engine with certain allowable modifications.

Due to the nature of this class, the engine is a completely tech-able item. Thorough engine examination is recommended to all affiliate's tech staff.

Competitors/Builders if you do not wish to perform engine teardowns after an event do not enter this class.

This is a spec engine class and must only utilize the engine internal components specified in the build sheet. A World Formula Briggs engine is not allowed. The engine is derived from a 206 Briggs engine.

2. The engine components are required to be the designated components supplied by Briggs and may not be altered except as directed in the supplied engine rules.

LINK HERE FOR Briggs rules for this engine package.

DRIVE

1. Clutching in open. CVT type transmission allowed. Drive components must be commercially available.

Cross Country 2026 - 2027

2. A metal clutch/chain cover must always be in place during operation. It must cover clutches, gears, belts, chains, starter cups, and any other rotating components.
3. Brakes must always be properly operable .
4. Track drive sprockets may be modified or changed.
5. Jackshaft allowed.

SKI SUSPENSION AND STEERING

1. Ski suspension and steering may be changed or modified. Materials and components must meet or exceed OEM strength and structural integrity. Must maintain suspension travel with driver seated. No rigid suspensions.
2. The structural integrity of the steering and suspension systems must be maintained.
3. Maximum ski stance is 36 inches (measured between ski runner cutting edges)

SKI AND SKI RUNNER

1. Skis may be changed to commercially available aftermarket skis.
   a. Minimum length for Sno-cross is 20 inches.
2. Ski loop must conform to GENERAL RULES AND REGULATIONS.
3. Ski runners must meet competition and safety requirements for the type of racing (i.e., Oval /Sno-cross/ Cross Country).

TRACK SUSPENSION

1. Track suspension may be altered, relocated, or replaced. Structural integrity must be maintained.
2. Suspension must maintain a minimum of 2 inches of useable, vertical travel with the driver seated.
3. Track and track suspension must fit and be mounted within the confines of the tunnel.
4. Slide rail lubrication systems may be allowed, depending upon local, state, and/or federal laws and must utilize non=toxic and biodegradable lubricants.

TRACK AND TRACTION

1. Track must conform to Stock class rules.
2. Track may not be reversed.
3. Traction control devices must conform to rules in Stock class.

FRAME AND BODY

1. Snowmobile length must not exceed OEM for the model length by more than 2 inches (ski loop to rear of tunnel).
2. Overall body width must be within 2 inches of OEM for the model body width.
3. Bumpers must be padded (no sharp edges exposed).
4. Snow flap must be touching ice with driver aboard.
5. Belly pan, and hood may be replaced. Belly pan and hood are required components.
6. Bulkhead may be modified or replaced: it must remain within 1 inch of the length and 1 inch of the width of the OEM bulkhead.
7. Tunnel may be modified or replaced using aluminum material only. Material must be a minimum of .062” thick.

IGNITION & ELECTRICAL

1. Ignition coil must be OEM for model and not exceed ISR specified RPM. Flywheel may be replaced with an aftermarket billet aluminum flywheel designed for the application. Lighting coil may be removed.
2. Taillight must always be illuminated while on the racing surface, whether the engine is running or not.

Cross Country 2026 - 2027

Iron Dog 600 PRO CLASS

The snowmobile must have original OEM engine, hood, exhaust, intake, frame, cowl, and drive. Named components must be of same model and year, or properly filed OEM replacement parts which supersede original OEM parts.

CLASS SNOWMOBILE CRITERIA

Any stock production snowmobile of 600 cc or less engine displacement volume, or equivalent 4 stroke model. Snowmobile must be fuel injected and will be required to run on straight gasoline. No oil/gasoline premixed fuels will be provided. Production quantities must be within ISR stock qualified manufacturers guidelines.

ENGINE

1. Engine must remain in original mounting location, and be conformed to the snowmobile from OEM manufacturing
2. No component of the engine may be altered changed or enlarged from the engine manufacturer's original stock specifications, nor may any additional components be added to the engine.
3. Blueprinting of engines will not be allowed. No removal of material whatsoever is allowed. This is to include polishing, port matching, deburring, abrasive blasting surfaces or material removal for the purposes of engine balancing or other reasons.
4. Maximum cylinder overbore for wear or cylinder repair cannot exceed .020 inch.
5. Stock OEM pistons only are allowed for replacement.
6. There may be no more than one cylinder base gasket to a cylinder. No changes in engine dimensions can be made by gasket adjustments.
7. Spark plugs do not have to be OEM.
8. Rotary valve if used, timing/duration must remain as filed by the manufacturer.
9. On four stroke models all valve train components and timing must remain OEM for the model.
10. No modification to the throttle body allowed.
11. No pressure charging allowed. The engine air intake system is to include any: cowl vents, air box, noise reducing foam (cowl vents & air box), injector mounts, fuel rails, and cylinder throttle body adapters, clamps, rotary valves, reed valves, intake or exhaust valves, and oil injection nozzles that are original OEM equipment for that make and model. Deep snow cover/foam must remain in place.
12. No changes or modifications can any part of the engine air intake system or mounting locations.
13. CDI/ECU module may be reprogrammed.
14. Oil injection system and all associated components must always be installed in their OEM configuration.
15. No additional engine cooling systems allowed. Additional cooling is only allowed if the Board of Directors approve it based on annual snowfall or weather conditions. Additional cooling would have a maximum of 100 combined inches and no electric fan.
16. Engines will have OEM tags and/or serial numbers affixed to the engine.
17. The exhaust system is to include any, header flange or pipe, Y pipe, expansion chamber, pulse charger, muffler, and tail pipe that are original OEM equipment for that make and model. No changes or modifications of the exhaust system or mounting locations. Aftermarket muffler/can may be used but must meet the 88 dec. noise limit or below.
18. Thermostats must remain in place and remain functional.
19. Cooling system must remain in the stock location except tunnel mounted heat exchangers may be relocated for stud clearance but must remain in the confines of the tunnel.

DRIVE

1. Must have original OEM drive clutch and driven clutch (torque converter) as supplied by the manufacturer for that make and model.
2. Any springs, weights or ramps may be used. No clutch engagement RPM limit.
3. No machining on clutches to accommodate
4. springs and weights.
5. In the primary clutch, any commercially available ramps, weights, or springs may be used.
6. Secondary clutch cams may be cut to any angle. Billet helixes allowed.
7. No overdrive machining.
8. Drive belts do not have to be OEM.
9. Track drive shaft and drive sprockets may be changed.

Cross Country 2026 - 2027

10. **Any drive chain and sprockets may be used any belt drive and drive cogs may be used.**
11. **Chain case / Belt drive case must be original OEM for the model equipment. Must remain in original mounting location. Chain/belt drive tensioner may be changed to any OEM equipment.**
12. Brakes may be changed or altered but must be always operational. Brake
13. components must be commercially available.
14. Brake disk may not be modified in the pad contact area. Brake disk hub may be modified for mounting. OEM diameter and thickness must be maintained. Any brake disk used must be of the same material as OEM for the model disk. No aluminum or carbon disks allowed.
15. Brake control handle must remain in OEM location on the left, front side of the handlebar.

SKI SUSPENSION & STEERING

1.Front suspension mounting locations (both upper and lower) on the chassis bulkhead/weldment/casting must remain in OEM location. Upper shock mount must remain in OEM location.
2. Front suspension control arms, spindles and tie rods are open. Front suspension structural materials must be steel or aluminum, including fasteners.
3. Sway bars (anti -sway) may be added. Sway bars must be steel only.
4. Maximum carbide to carbide ski stance must not exceed forty-three- and one-half inches (43.5 inches) Center to center distance will be measured as follows: on units with centered carbide on skis, carbide to carbide dimensions with skis straight ahead and rider in seated position in natural contour of the seat will determine measurement. Measurement will be taken at the carbide cutting edge. On units with offset carbide, outer carbide cutting edge on right ski to outer carbide cutting edge on the left ski, with skis straight ahead and rider in seated position in the natural contour of the seat will determine the measurement. Measurement will be taken at the carbide cutting edge as noted by location as the unit comes off the racecourse. measurement may be by carbide scratch marks in natural terrain, or by carbide impressions on a soft wood lath when the skis are placed on the measurement device with driver in seated position.
5. Reinforcement of components is allowed by welding or bracing. Structural integrity must be maintained.
6. Any shock allowed.
7. Handlebars must be intact at the start of each race day. Any commercially available handlebar allowed. May be altered to fit the driver. Open ends must be capped. Handlebars must be padded. Column or post must remain in its OEM position. Grips and controls may be modified. Throttle must be opened with a thumb mechanism located on the right-hand handlebar to the rear of the machine (no twist grips).
8. Commercially available handlebar risers, vibration mounts and relocation mounts allowed.
9. Any spring may be used on the suspension.

SKIS & SKI RUNNERS

1. Any commercially available ski. Ski must be a minimum of 39" long and must meet ski diagram in GENERAL RULES AND REGULATIONS section.
2. May reinforce skis on the topside only.
3. **Cutting edge material may be altered to an angle of not less than sixty (60) degrees inside included angle.**

TRACK SUSPENSION

1. Rear suspension is open as to design and type. Suspension must be centered in the tunnel.
2. Rear suspension structural materials must be steel or aluminum. Unless OEM for the brand.
3. Any hyfax allowed.
4. Any shock allowed.
5. Any spring may be used in the rear suspension.

TRACK & TRACTION

1. Track must be commercially available, one-piece, molded rubber track. A minimum of 2-studs per track bar.
2. Track clips/guide may be added

FRAME & BODY

1. All chassis will have OEM tags and/or serial numbers affixed to the frame.
2. Removal of any material from total machine by means of heat, acid, drilling, grinding, abrasive blasting, peening, substitution, or total elimination will not be allowed.
3. Windshields must be commercially available and mounted in OEM location. They may be altered for handlebar movement. Must have a safety edging. No snowmachine can leave any checkpoint without a windshield intact.
4. Seat must remain in OEM for the model location (you do not have to use OEM mounting points) and maintain OEM contour and shape.

Cross Country 2026-2027

5. Access openings are allowed for component removal or service. Vents may be covered or closed.

6. Venting for the purposes of brake cooling is allowed. Ducts/ Scoops maybe added for purposes of brake venting. All venting for brake cooling purposes must contain and direct airflow to the brake caliper and disc assembly only. Any specialized vents that allow outside cooling air beyond the brake system or derive cooling air from the vent before it travels to the brake system is not allowed.
7. Skid plates may be added for protection of snowmobile chassis. Skid plates must be securely fastened.
8. Additional plate material may be added to the tunnel at the suspension mounting holes.
9. Reinforcement of components is allowed by welding or bracing. Structural integrity must be maintained.
10. Tunnel protective wear strips may be added, removed, or altered.
11. Aftermarket front and rear bumpers may be added. Added items must not be a safety hazard. Technical inspector's decision is final.
12. The stock fuel tank may be replaced. Aluminum, plastic, or steel tanks only. Additional fuels tanks may be added should they be deemed necessary.
13. Snow flap must be OEM molded snow flap for the make and model as designated by the manufacture. Additional material maybe added to help cooling.

VENTING

Venting in Iron Dog classes.
Applies to all classes that use Stock Qualified sleds approved by ISR.
Manufacturers will be permitted to devise vent kits for Stock Qualified sleds to aid in controlling under cab/hood heat, air movement and improve safety in the areas affected by the beyond design limits operating temperatures encountered in competition.

ALLOWABLE ADDITIONAL VENTING FOR All STOCK QUALIFIED SLEDS

10. An additional 36 square inches (area) of venting will be allowed/permitted.
11. Venting may be located anywhere in the cab/hood/ belly pan structure, including dashboard panel.
12. Venting may be utilized for air in or air out.
13. Venting shall not be directed, channeled, or ducted to specific areas. All venting must use natural airflow to cool or move air through the area attempting to cool or assist in airflow.
14. Size of venting in each situation is not dictated, but total vent locations must not exceed 36 Square inches in area, more than production venting.
15. Venting may be covered with "Frog Skin" or other like materials to prohibit snow ingestion.
16. These vents shall not be connected to airbox/plenum, or any other part of the intake system, regardless of design of the engine. (Carb or EFI)
17. All users must follow the manufacturer's approved layout of the venting and must adhere to size and location specified. No additional changes by the installer will be allowed. Manufacturers must provide instructions, template if necessary, and other info when venting is required. The manufacture can inform of this process by electronic communication.
18. Manufacturers can file only one update per model year/season.
19. Brake venting allowances are covered in specific brake venting rules, this is not to be construed as specific brake venting. Brake venting must be ducted to the specific location designed for cooling aid or assistance.

IGNITION & ELECTRICAL

1. Ignition must be OEM for the year and model.
2. CDI/ECU module may be reprogrammed.
3. No aftermarket device allowed which interrupts ignition for launch control or traction control unless OEM for the model.
4. Instrumentation may be added but must not present a safety hazard.
5. Head and taillights must be original OEM equipment for the model. Must remain in original mounting location. Additional Head lights may be added. Tail light might be altered depending on the seat and fuel tank rules.

Cross Country 2026 - 2027